VISIT…

LANZAROTE Caliente.COM

HARTFORD STEAM BOILER
HARTFORD,
CONN.
INSPECTION AND INSURANCE CO.

Class [redacted] Book [redacted]

PRESENTED BY

Mr Andrew Carnegie.

The Locomotive.

PUBLISHED BY THE

NEW SERIES.

Vol. XI.

HARTFORD, CONN.

1890.

The Locomotive.

PUBLISHED BY THE HARTFORD STEAM BOILER INSPECTION AND INSURANCE COMPANY.

NEW SERIES—VOL. XI. HARTFORD, CONN., JANUARY, 1890. No. 1.

Receiving Tanks on Heating Systems.

The return of drips in heating systems that take steam directly from low pressure boilers may be managed readily enough; but when high pressures have to be maintained in the boilers for the purpose of running pumps or elevators or furnishing power, and the steam for heating has to be passed through reducing valves, some new elements of difficulty come into play and call for careful consideration. Our illustrations this month show receiving tanks as applied to such systems.

Our attention was recently called to a heating installation that was giving great trouble from pounding and rattling, and upon examination the receiving tank was found to be arranged as in Fig. 1. As the faulty arrangements in this instance are very frequently met with, we shall describe them somewhat in detail. The returns entered the

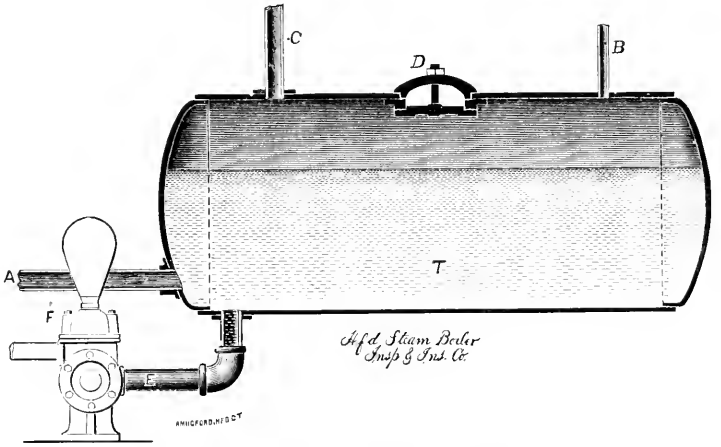

FIG. 1.—INCORRECT ARRANGEMENT.

receiver through a three-inch pipe, shown at *A*, this pipe entering through the head near the bottom of the tank. The supply for the pump *F* (which returned the water from *T* to the boilers) was taken from the bottom of the tank through pipe *E*. An escape pipe was placed in the top of the receiver as represented at *B*, to relieve the pressure. Cold water was also admitted when necessary, through *C*; and in cold weather, when all the radiators were in use, this cold water supply was admitted very freely, the claim being made that the return through *A* was so great in such cases that the water in the tank would get so hot that the pump would not work, although it was placed properly so that water would flow into it of its own weight.

A glance at the arrangement of the system will show the steam-heating engineer the cause of the trouble. The return pipe entering below the level of the water in the receiver, a considerable portion of the steam that is returned is condensed at once upon

78613

striking the cold water, and the concussion and rattling noise so produced is communicated through the piping to every one of the buildings heated. The trouble with the pump is that the returns enter close by and at right angles to the pipe through which the pump takes its feed, so that the steam that enters *A* along with the water of condensation breaks the current in the suction pipe.

A proper arrangement of these connections is shown in Fig. 2, where the return pipe (*A*) enters at the top, discharging the water of condensation upon the surface of that in the receiver. The escape pipe has been removed, and the vapor collecting over the water cannot pass off. By this removal of the escape pipe a great saving of heat (and therefore of fuel) is effected, which saving can be approximately calculated by means of tables of the properties of steam. The pipe being $1\frac{1}{2}$ inches in diameter, and the pressure in the tank being (let us say) one pound above the atmosphere, a simple calculation shows that a prodigious quantity of steam will flow through it and go to waste in the course of twenty-four hours; and any one who is sufficiently interested to make the calculation will find that an escape pipe like this one is a surprisingly expensive thing.

The return pipe, *A*, when arranged as in Fig. 2, acts as a relay, and if the pressure from accumulating vapor in the receiver equals that in the heating system the water of

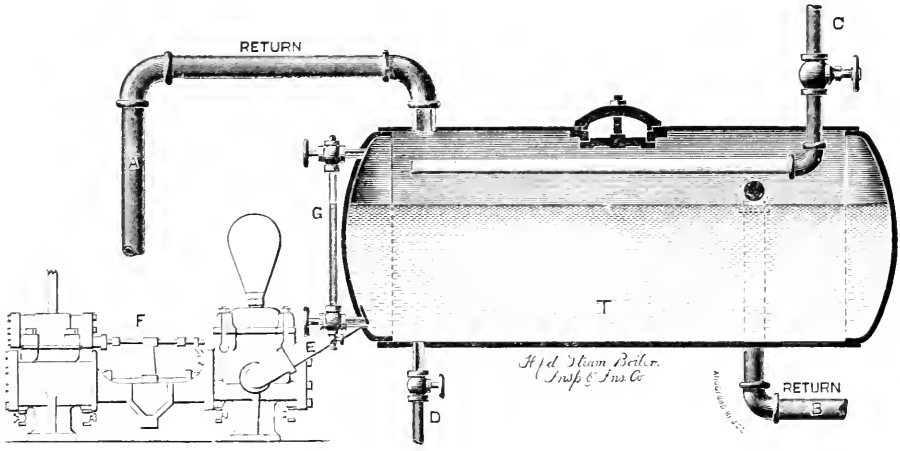

FIG. 2.—CORRECT ARRANGEMENT.

condensation will flow into the receiver only as fast as it accumulates in the pipes. Thus the connections and returns may be kept flooded so that all noise in the pipes will be prevented. It is well, when all the pipes to the radiating surfaces are of good size and the pressure throughout the system uniform, to run a small pipe from the steam main to the receiver so as to prevent the water from being blown out of the return pipe. This will make the flooding of the connections sure, and the small pipe may very easily be so arranged as to remove the drip from the main steam pipe, as well as to keep up the pressure in the receiver.

A drip valve should be placed at the lowest point of the return pipe for draining it when it is not in use, and one should also be placed on the receiver to remove air and prevent an air-bond in first starting up the system.

In Fig. 2 the pipe that supplies the pump (*E*) is represented as connected to the head of the tank. This is by no means essential; the best place to connect it will readily be found from the circumstances of each individual case. If it is run into the bottom of the tank, as in Fig. 1, it should project four or five inches into the tank, so that any sediment that may be in the water may deposit on the bottom plates and be

removed through the blow-off shown at *D* in Fig. 2, and not pass through the pump. The engraver has represented the cold water supply pipe, *C*, as running the length of the tank before it discharges. This is also not an essential feature. We should prefer, in fact, to have *C* discharge into the tank directly, without the intervention of the elbow and horizontal pipe.

In Fig. 2 a second return pipe is shown at *B*, to illustrate a point that it is sometimes useful to know about. Ordinarily all the drip would be returned through the one pipe, *A*. There may be some radiators, however, that are supplied through pipes that are too small to allow of the free passage of sufficient steam; or some of the radiators may be so nearly on a level with the water in the receiver, *T*, that they will not return their drips freely enough through *A*. In such cases it is often advantageous to allow these radiators to return their water through a separate pipe, *B*, that enters the tank eight or ten inches or a foot lower than the surface of the water in pipe *A*. This will give the ill-conditioned radiators the advantage of a correspondingly less static pressure to return against, and will equalize the circulation all over the buildings.

Inspectors' Reports.

NOVEMBER, 1889.

During this month our inspectors made 4,914 inspection trips, visited 9,204 boilers, inspected 3,552 both internally and externally, and subjected 640 to hydrostatic pressure. The whole number of defects reported reached 8,746, of which 681 were considered dangerous; 36 boilers were regarded unsafe for further use. Our usual summary is given below:

Nature of Defects.	Whole Number.	Dangerous.
Cases of deposit of sediment,	561	29
Cases of incrustation and scale,	857	40
Cases of internal grooving,	30	8
Cases of internal corrosion,	284	27
Cases of external corrosion,	590	45
Broken and loose braces and stays,	128	32
Settings defective,	267	30
Furnaces out of shape,	278	10
Fractured plates,	161	40
Burned plates,	139	28
Blistered plates,	265	10
Cases of defective riveting,	2,126	87
Defective heads,	96	22
Serious leakage around tube ends,	1,713	135
Serious leakage at seams,	376	20
Defective water-gauges,	238	27
Defective blow-offs,	106	23
Cases of deficiency of water,	17	14
Safety-valves overloaded,	41	17
Safety-valves defective in construction,	68	14
Pressure gauges defective,	302	21
Boilers without pressure gauges,	2	2
Unclassified defects,	101	0
Total,	8,746	681

Boiler Explosions.

NOVEMBER, 1889.

THRESHING ENGINE (144). The boiler of a steam threshing engine exploded at Grand Forks, Dak., on October 31st. Israel Sheppard, the owner, was instantly killed. Engineer Crittenden, the fireman, and another man were badly wounded. All may die. [We did not learn of this explosion in time to include it in its proper place.]

DONKEY ENGINE (145). The boiler of a donkey engine engaged in unloading vessels at Howard Street wharf, San Francisco, exploded November 1st, killing Edward Ferman, a longshoreman, and severely injuring Louis Forster, who was acting as engineer. Another man was slightly injured. The men were moving the engine when the explosion occurred.

AGRICULTURAL ENGINE (146). The boiler of a steam engine belonging to Thomas L. Badget, and located on his plantation about ten miles southeast of Laurens, S. C., was blown to pieces on November 2d. There were six persons, all negroes, at and near the engine, three of whom were killed outright, two others probably fatally injured, and one very seriously injured. The engine was blown across the creek to a distance of one hundred and fifty yards. All the persons present were blown to distances ranging from forty to one hundred yards. The engineer was on the engine, and was hurled through the air to a distance of seventy yards. Some of his garments were left hanging to the tree-tops through which he was blown.

SAW-MILL (147). The boiler of Perry Riddle's mill, at Leavenworth, Ind., burst on November 4th. No one but the engineer, Henry Wiseman, was seriously hurt. Wiseman had a wonderful escape from death. His hat was blown eighty-five yards. He turned three or four somersaults, and was badly scalded; and but for the timely aid of the mill hands, he would have been scalded to death.

STEAMER (148). About noon on November 5th, while the fishing steamer *S. S. Brown* was cruising off the New Jersey coast, twenty-five miles from the Delaware breakwater, her boilers exploded, instantly killing Fireman John Lecasta of New London, Conn., and fatally scalding Chief Engineer Charles Railey and Assistant Engineer William Ludlow, both also from New London. Three deck hands, H. Thompson and Fred Turner of Connecticut, and Z. Sutton of Delaware, were seriously, but not fatally, scalded. The engines were shattered, and part of the deck and house blown off. The steamer *Allyn* went to the assistance of the distressed vessel, and carried the injured men to the United States Marine Hospital at Lewes, Del.

BREWERY (149). On November 8th the boiler in Daniel P. Chesbrough's brewery, on Depot Hill, Lansingburgh, near Troy, N. Y., exploded with great violence, completely wrecking the building, and dangerously injuring Seth Chesbrough, the proprietor's son, who was the only person near by at the time. The boiler was a small one, rated at only seven horse power. At the time of the explosion, the young man states, the pressure was 70 lbs.

STEAM TUG (150). The boiler of the tug *Comet* exploded on November 9th, at Buffalo, N. Y., badly wrecking the boat and injuring two of the crew. Engineer Daniel Lagrew was blown fifty feet into the air and fell into the canal, where he was picked up. One of his arms and a leg were broken, and he was also badly bruised and scalded. Captain Oder was also thrown into the water, but his injuries are not serious.

COLLIERY (151). A terrible boiler explosion occurred, November 10th, at No. 1 Colliery, Mt. Pleasant, four miles from Hazleton, Pa., in which three men were scalded

to death. The colliery is owned and operated by Calvin Pardee & Co., and is situated about 300 yards from the village of Mt. Pleasant. Frank Monk, an Italian ash-wheeler, was instantly killed. He was standing in front of the boilers, pouring water on the red-hot ashes, preparatory to wheeling them out. The boiler was blown into two pieces; one piece was thrown northward a distance of about 100 feet, and the other about 100 yards into a reservoir. The four other boilers were moved by the explosion, and the second one was blown up into the air a distance of about fifty feet, and as it came down it crashed through the roof of the engine-house, struck an upright iron rod, which pierced it, and the escaping steam scalded John Bullock and Joseph Babbish, the assistant firemen, so badly that they died shortly afterwards.

Saw-Mill (152). At Wirt, Wis., on November 11th, a saw-mill belonging to James Scott was destroyed by the explosion of a boiler. Mr. Scott was blown into the creek and picked up in an unconscious condition. His injuries will prove fatal.

Locomotive (153). Between six and seven o'clock A. M., on November 12th, as a Fort Worth freight train was nearing Graneros, pulled by engine 202, the boiler of the engine exploded, throwing fireman D. E. Willey violently to the ground and breaking both bones of his right leg a little above the ankle. Willey was carried to Pueblo at once, and properly cared for. No. 202 was a new, big, ten-wheel "hog" engine, just out of the Denver shops, and was making her first trip to Trinidad.

Tannery (154). An explosion occurred at the tannery of C. Bareuther & Co., Jefferson, Wis., on November 12th. The dome of the steam boiler, which has the appearance of being old and rust-worn, was lifted from its position and carried through the second-story floor and the roof of the building, which is damaged to the extent of several hundred dollars. No one hurt.

Steel Works (155). On November 12th one of the boilers of the New Jersey Steel and Iron Company exploded. Portions of the boiler-house were carried fifty feet in the air, and half way across the Delaware River. The workmen in the employ of the company had not then reported for duty, and there was no one in the boiler-house at the time of the explosion but fireman John Donlin. The latter was attending to the fires when the explosion happened. He was badly scalded about the face and shoulders, and sustained several severe cuts about the head from the flying pieces of iron and falling timbers. The boiler-house was completely wrecked. The loss is estimated at $15,000.

Distillery (156). On November 22d a boiler exploded at the John Hanning distillery, Owensboro, Ky., fatally injuring the fireman, a colored man named Tony Smith, and scalding Ben Meredith, the engineer. There were fifteen others in the house at the time, but none of them were hurt. The building was terribly wrecked. There were five boilers in the battery, one of which was blown from its foundation and stood on end thirty feet away. The damage to the distillery, it is said, will amount to $7,500.

Saw-Mill (157). On the plantation of Mr. James Norris, four miles from Thomson, Ga., a saw-mill was in operation on November 22d, and everything was working smoothly enough. The hands were sitting around the boiler, mending some belting, when the boiler burst, scattering its fragments in all directions. Among its victims was the engineer, Charlie Smalley, colored. He was blown a distance of fifty yards, and instantly killed. George Bunch, white, was scalded, dying in half an hour; Jack Stokes, colored, was fatally injured, and at last accounts his death was expected.

Boiler Shop (158). On November 23d a twelve-horse-power boiler exploded in C. J. Johnson's boiler shop, Joslyn, Mo., instantly killing John Madison, and seriously and perhaps fatally wounding Thomas Johnson and A. L. Crockett. C. J. Johnson, the proprietor, and his sons, John and George, were scalded and received slight wounds.

Madison and Crockett had purchased the boiler and engine on conditions, and it was being tested when the explosion occurred. The front of the building was blown out by the force of the explosion, and the boiler was thrown through the opposite end, demolishing in its course the engine and the boiler which furnished power for the shops.

STEEL WORKS (159). A boiler explosion at the Allegheny Bessemer Steel Works, at Duquesne, Pa., ten miles from Pittsburgh, on November 26th, caused the death of William Marshall and John Cooper. Robert North, a millwright, was seriously burned by steam. Mr. Marshall was night manager of the mill, and Cooper was the fireman. The battery of boilers is in a shed on the river bank, away from the finishing department of the mill. The boiler that exploded was divided lengthwise by the force of the explosion. The men were in front of the boilers when they exploded, and Marshall was killed instantly, but Cooper lingered in great agony at the Homeopathic Hospital for some hours. The boiler-house was wrecked by the force of the explosion, and the damage will amount to $2,500. The explosion caused the shutting down of the entire mill, which has been running on large orders. North was some distance from the boiler when it exploded, and sustained severe burns.

STEAM YACHT (160). The steam yacht *Delight* exploded her boiler at Waccamaw Island, near Charleston, S. C., on November 28th. Capt. P. Toglio, of the *Delight*, reports that the explosion "tore all the upper work and severed the hull, throwing a portion of the bow on shore, the stern sinking in about five feet at low water." There was no injury to any of the crew of the steamer. A colored boy, standing on the wharf near by, received some cuts about the face from the flying débris. Capt. Toglio believes the steamer to be a total loss. The *Delight* was the property of Mr. W. B. Chisholm, and was valued at $2,000.

BREAKER (161). On Saturday, November 30th, three boilers of a nest of twenty-one exploded with terrific force at Breaker No. 4, at Jeansville, Pa., operated by J. C. Haydon & Co. The fireman, George Peacock, aged 23, was burned to death. The building is a total wreck, catching fire after the explosion. One of the boilers was blown a distance of 200 yards, grazing the corner of a house in its flight, the inmates of which were in bed.

The First Thanksgiving Proclamation.

Following is the first Thanksgiving-Day proclamation ever issued by a president. The original is in the possession of the Rev. J. W. Wellman, and came down to him as an heirloom from his great-grandfather, William Ripley, of Cornish, N. H. We had never seen this proclamation before, nor even heard of it.

BY THE

PRESIDENT

OF THE

UNITED STATES OF AMERICA.

A PROCLAMATION.

WHEREAS it is the Duty of all Nations to acknowledge the Providence of Almighty God, to obey his Will, to be grateful for his Benefits, and humbly to implore his Protection and Favour: And whereas both houses of Congress have, by their joint Committee, requested me "To recommend to the People of the UNITED STATES, a Day of PUBLIC THANKSGIVING and PRAYER, to be observed by acknowledging with grateful Hearts the many Signal Favours of Almighty God, especially by affording them an opportunity peaceably to establish a Form of Government for their Safety and Happiness."

NOW THEREFORE, I do recommend and assign THURSDAY the TWENTY-SIXTH DAY OF NOVEMBER next, to be devoted by the People of these States, to the Service of that great and glorious Being, who is the beneficent Author of all the good that was, that is, or that will be: That we may then all unite in rendering unto him our sincere and humble thanks for his kind Care and Protection of the People of this Country previous to their becoming a Nation; — for the signal and manifold Mercies, and the favourable Interpositions of his Providence in the Course & Conclusion of the late War; — for the great Degree of Tranquility, Union and Plenty, which we have since enjoyed; — for the peaceable and rational Manner in which we have been enabled to establish Constitutions of Government for our Safety and Happiness, and particularly the national one now lately instituted; — for the civil and religious Liberty with which we are blessed, and the means we have of acquiring and diffusing useful knowledge; — and in general, for all the great and various Favours which he hath been pleased to confer upon us.

AND ALSO, that we may then unite in most humbly offering our Prayers and Supplications to the great LORD and RULER of Nations, and beseech him to pardon our National and other Transgressions; — to enable us all, whether in public or private Stations, to perform our several and relative Duties properly and punctually; — to render our national Government a Blessing to all the people, by constantly being a Government of wise, just and Constitutional Laws, directly and faithfully executed and obeyed; — to protect and guide all Sovereigns and nations, (especially such as have shown kindness unto us) and to bless them with good Government, Peace and Concord; — to promote the Knowledge and Practice of true Religion and Virtue, and the increase of Science among them and us; — and generally to grant unto all Mankind such a Degree of temporal Prosperity as he alone knows to be best.

Given under my Hand, at the City of New York, the third Day of October, in the year of our Lord One Thousand, Seven hundred and eighty nine.

G. WASHINGTON.

Death Gulch.

Walter H. Weed, of the United States Geological Survey, in a letter to the *Evening Post*, thus describes his experience in a remote ravine of the Yellowstone: "Turning aside to explore this place, we ascended the ravine, finding it rather difficult walking in the little stream-bed, and hard work getting up several draps where the stream forms miniature falls of five or six feet. Above one of these tiny cataracts we first noticed a white, or rather creamy, seductive-looking substance in the stream-bed. This was so like genuine country cream that it was hard to believe it a purely mineral substance, but such it is, and formed about the minute oozing springs which issue from the bottom and sides of the gulch. It was here, too, that we first noticed a sulphurous odor and a slight oppression of the lungs — the irritating effect of the fumes of a sulphur match, accompanied by a choking as if from lack of air. We paused a moment to rest, and found ourselves strangely fatigued for so short a climb; but several gusts of the fresh northwest wind filled our lungs with new vigor, and we continued our clamber up the gulch.

"With heads bent and eyes eager to note the curious deposits in the ravine bottom, it was not until quite close to him that we noticed an immense grizzly bear but a few yards ahead of us. Startled by so sudden and so close an encounter, we instinctively gave a leap up the steep slope, well knowing that the up-hill side is the safest when a bear is near and no trees handy. But while we scramble a second look is more assuring, and though the shaggy head rests as if asleep in the warm sunshine, something in the expression and attitude induced us to utter a trial shout which elicited no response from

Brer B'ar. Instantly relieved, and laughing at our fears, we slid down the slope and landed beside a huge specimen of the most formidable of all the wild animals of the Rockies — a silver-tip grizzly — whose long claws and sharp teeth showed evidence of having done good service. Fat as butter, and possessing a thick coat of fur that would have sold for a small fortune in a New York furrier's, he seemed ready for his long winter nap. Rolling him over, we could find no bullet-holes, no mark of violence, the only sign of injury being a few drops of blood beneath his glistening black nose. That he had been dead but a short time was certain, for there were no flies, and the carcass was fresh and natural looking.

"How had he met his death? was the question we asked each other, and at first it seemed an enigma. But, stranger still, beside him lay the decaying remains of yet another bear, also a grizzly, and above this, a few yards up the gulch, the fur and bones of other bears, five skeletons being counted, besides the ribs and shoulder-blades of an elk. While looking at this strange sight, reminding one of the death-chamber of the Chinese, or the burial-place of the Parsees, we find ourselves faint and dizzy, and suddenly realize our own danger. Climbing quickly up the slope until the fresh breeze restores our strength, the mystery is solved. It is carbonic acid gas that had filled our lungs, and, had it overcome us, might have added our skeletons to those of its victims now lying in the gulch. Descending again, we risk possible asphyxiation to test the gas with a strip of lighted paper, which it quickly extinguishes — confirming our belief as to its presence. Above the elk-bones we found several dead birds, a rock hare, and numerous lifeless butterflies, besides a red squirrel — a pretty little fellow, suffocated, like the others, while crossing the gulch.

"The explanation is now simple enough. The hot springs which once flowed from these slopes are now things of the past, but leave their record in their deposits, and the white slopes of decomposed rock; but they are succeeded by invisible emanations of gas, mainly, no doubt, carbonic acid. This, as is well known, is heavier than air, and if emitted abundantly, will collect in hollows and depressions in the slope, and any animal unwary enough to venture into the ravine when the air is still risks suffocation by the gas. It was doubtless the remains of some such unfortunate that tempted the first bear, whose remains served in turn to attract another, and he yet another, until seven in all have perished."

Electrical Terms in Common Use.

Now that so much discussion is going on in the papers concerning the proposed method of execution by electricity, we are constantly meeting with the words "ohm," "ampere," "volt," and others, the meanings of which are not familiar to us. The following definitions will straighten them out to a certain extent:

CURRENT. A current, in the electrical sense, means a flow of electric force through a wire or some other conducting substance. A CONTINUOUS current is one which flows all the time in one direction. An ALTERNATING current is one which flows first in one direction and then in another, the reversals in direction taking place very rapidly. A Westinghouse dynamo gives about 150 reversals a second.

AMPERE. Some currents of electricity are more powerful than others, and it is customary, in speaking of their intensities, to compare them with a standard current called an AMPERE. An ampere is of such a strength that it will decompose 5¼ grains of water per hour. The name comes from Ampère, a celebrated French electrician.

DYNAMO. This word is derived from a Greek word meaning "power." A dynamo is a machine for converting mechanical energy into electricity.

RESISTANCE. By this word is meant the opposition that a wire or other conductor offers to the passage of a current of electricity. Thus it will be readily understood that

it is not so easy to send a given current of electricity through a long wire as through a short one; nor through a little one as through a big one.

OHM. This is the unit of electrical resistance. Resistances are compared with one another by stating how many ohms they are respectively equal to. A wire of pure copper that is 0.056 inch in diameter and 100 yards long offers a resistance of one ohm to the passage of an electrical current. The word "ohm" comes from the name of a German electrician — G. S. Ohm.

ELECTROMOTIVE FORCE. By this is meant the electrical pressure that a battery or a dynamo can get up. The higher this electrical pressure is, the greater is the current that the dynamo or battery can send through a given resistance.

VOLT. The volt is the unit used in estimating electrical pressures. An ordinary Daniell's cell — or a cell of gravity battery, such as is used in telegraphing — is capable of giving an electrical pressure of almost exactly one volt. The pressure (or electromotive force) given by dynamos varies greatly with the style of machine and the speed at which it is run. Edison dynamos give about 110 volts, and Westinghouse dynamos about 1,000 volts. The word "volt" is taken from the name of an early Italian experimenter — Volta.

ELECTRODE. This term is used rather loosely, and may be considered to mean the same as the POLE of a battery or a dynamo. Oftentimes it stands for the metal plates or wet sponges that are connected to the poles of the battery or dynamo and applied to the person under treatment.

WHEATSTONE'S BRIDGE. This is an instrument devised by Wheatstone, an English electrician, for measuring resistances.

The confusion that exists in the public mind in connection with these electrical terms comes not only from their newness but also from the unintelligent way in which newspaper reporters and even editors use them. Thus an article lying before us at the present moment, which professes to straighten out some of the crookedness associated with them, contains numerous references to *currents* of such and such a number of *volts* — expressions that are quite meaningless, since currents cannot be measured in volts. *Resistances* are measured in *ohms; currents* are measured in *amperes; electromotive forces* (in other words, *electrical pressures*) are measured in *volts*. When we read about "1,000 volts of an alternating current" being fatal to life, we must understand that what the writer meant to say was that "the current of electricity that will be caused to flow through the human body by an alternating electrical pressure of 1,000 volts" is fatal to life.

The following, taken from the *Independent*, will be found of interest on account of its connection with the subject we have been discussing: Mr. Elbridge T. Gerry, who was chairman of the commission appointed by the Legislature in 1886, to investigate and report upon the most practical and humane method of executing criminals, told on the stand how thorough and exhaustive the work of the commission had been. Over forty ways of killing were considered, and thousands of authorities were consulted. All the books of all ages and all nations, treating on criminal execution, that could be obtained were examined, and the commission finally agreed that electricity would, on the whole, be the best agent for taking the life of criminals. He said the commission held that there were four methods preferable to hanging, and he named them in the order of their preference: (1) the guillotine; (2) the garrote; (3) the hypodermic injection of prussic acid; (4) electricity. The guillotine was rejected because of the effusion of blood and the associations of the instrument; the garrote because its use by Spain and her colonies condemned it in public opinion in this country; and prussic acid because of its unpleasant character and the difficulty of administering it properly.

The Locomotive.

HARTFORD, JANUARY 15, 1890.

J. M. ALLEN, *Editor.* A. D. RISTEEN, *Associate Editor.*

THE LOCOMOTIVE *can be obtained free by calling at any of the company's agencies.*
Subscription price 50 *cents per year when mailed from this office.*
Bound volumes one dollar each.

Papers that borrow cuts from us will do us a favor if they will plainly mark them in returning, so that we may give proper credit on our books.

THE Russian influenza — but no; we won't say anything about it. The papers have been full of it for a long time — and so have we.

WE acknowledge with much pleasure *The Technic*, an annual published by the Engineering Society of the University of Michigan. The frontispiece is a magnificent phototype of Prof. Cooley, who is also the subject of the leading article. Then follow articles on "Endurance Tests of Metals," on "Some Injector Tests," on "Overhaul," on "Bending Moments on Pins," and on many other useful and interesting subjects. Taken all together, *The Technic* is a decidedly superior magazine, and its equal is not often seen among college periodicals.

IT seems proper that we should make some editorial mention of the lawsuit that was recently brought against this company in Pittsburgh, Pa., by Messrs. A. & J. Groetzinger, of Alleghany City. The story of the case is as follows: An agent of this company had visited the Messrs. Groetzinger and solicited their insurance. They had expressed their willingness to insure, and July 8, 1888, was fixed as the date for the preliminary inspection. On the Friday preceding this day the boilers exploded, and in spite of the facts that no policy had been issued, no premium paid, no inspection made, and not even an application for insurance signed, the Messrs. Groetzinger sued us for ten thousand dollars. We regretted the suit very much, because it was clear that our opponents had no case at all. In fact, when the matter came into court, Judge Stowe dismissed the case at once, declaring that the Messrs. Groetzinger had no cause for action whatever.

It has long been the policy of this company to pay up its losses promptly, even when it might evade such payment by taking advantage of technical points in the law. Our record in this particular, as well as in all other particulars, is clean, and will bear investigation.

ALTHOUGH we consider low-water alarms to be good things, there is one point in connection with them to which we wish to call attention. Some of them are arranged so that the alarms sound not only when the water is too low, but also when it is too high. The result of this is well shown by the following incident that came to our notice a short time ago. A new superintendent had been appointed not long before, and one day he heard a whistle blowing in the boiler-room at an unusual hour. Making his way there very quickly, he found that there was nothing the matter except that the water was a little higher than it should have been. Several times thereafter

he heard the whistle blow again, and each time he went at once to the boiler-room only to find the same trouble as before. The result was, that after a time the whistle ceased to alarm him. Now, if there had been no high-water float on his alarm, he would never have become so used to the whistle that he would cease to feel apprehensive when he heard it blow. While we appreciate the intentions of the makers of these alarms, and would do nothing to injure their business, we feel it our duty to recommend that the high-water float be in every case removed from the double-acting alarms. Then when the whistle blows, it will have a definite meaning, and every one about the plant will know at once that there is immediate and pressing need of attending to the boiler giving the alarm.

On the Areas of Segments.

Among the calculations that the engineer often wants to make there is one for which no simple and perfectly accurate rule can be given. We refer to the calculation of the area of a segment of a circle. Rules based on the principles of trigonometry can be given readily enough, but they are not at all suited to the engineer, who wants something that is simple, that gives fairly accurate results, and that he can easily carry in his head.

Following is a rule that is simple enough, but which gives results that may be in error by fifteen per cent. or thereabouts. When such an error is permissible, this rule may be used; but when further refinement is necessary, one of those given below should be substituted for it. The shaded part in Fig. 1 may be considered as made up of a triangle and two small segments lying on either side of it. The area of the triangle may be found by multiplying the base by half the altitude; and it has been found, by

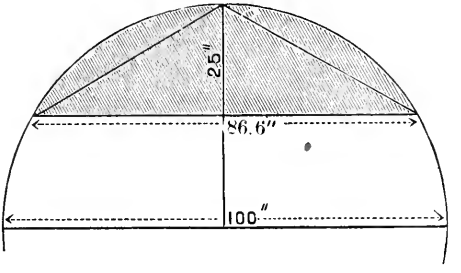

Fig. 1.—Illustrating Rule I.

calculations based on more exact methods, that the two small segments, taken together, are about equal to half the triangle. Therefore we have the following:

Rule I. Multiply the base of the segment by half the altitude, and to the product add half of itself. (Error may amount to 15 % or so.)

Thus in Fig. 1, half the altitude of the segment is $12\frac{1}{2}$ inches. ($25'' \div 2 = 12\frac{1}{2}''$.) Then, by the rule, $86.6'' \times 12\frac{1}{2}'' = 1{,}083$. Then half of 1,083 is 541, and $1{,}083 + 541 = 1{,}624$ square inches, which is the area sought.

The most satisfactory way to calculate the area of a segment is that given in the Locomotive for December, 1886. This method is exact, but it requires the engineer or inspector to have the table with him whenever he wishes to calculate a segment.

A method based on Simpson's rule for irregular figures (see Rankine's "Rules and Tables", p. 64,) is shown in Fig. 2. The base of the segment is divided into halves, and one of these halves is again divided into quarters, and a perpendicular line is drawn through each point of division up to the circle. These perpendicular lines are then

measured, and each is multiplied by the number written against it in the shaded space; all the products are added together, the sum is multiplied by the base of the segment, and the product, divided by 12, is the area sought. For the reasoning on which Simpson's rule is based we must refer our readers to treatises on mathematics, for the demonstration is quite unsuited to our pages. The rule is exact when the small parts into which the curve is divided are arcs of parabolas, and it is only approximate when these parts are only approximately parabolic. In the case of the circle, therefore, the rule is not exact; yet its accuracy is quite surprising. In the case of a 66″ circle, measurements of the perpendicular lines gave the results written above the lines respectively. The calculation is as follows:

$$\begin{aligned} 25'' \times 1 &= 25'' \\ 24'' \times 4 &= 96 \\ 20\tfrac{7}{8}'' \times 2 &= 41\tfrac{3}{4} \\ 14\tfrac{5}{8}' \times 4 &= 58\tfrac{1}{2} \\ \text{Sum} &= 221\tfrac{1}{4}'' \end{aligned}$$

$221\frac{1}{4} \times 64 = 14{,}160$; and
$14{,}160 \div 12 = 1{,}180$ sq. in. *Ans.*

The reader, after studying the preceding calculation carefully, will find the following useful:

RULE II. Divide the base of the segment into halves, and divide one of these halves into quarters. Draw perpendiculars through each point of division till they meet

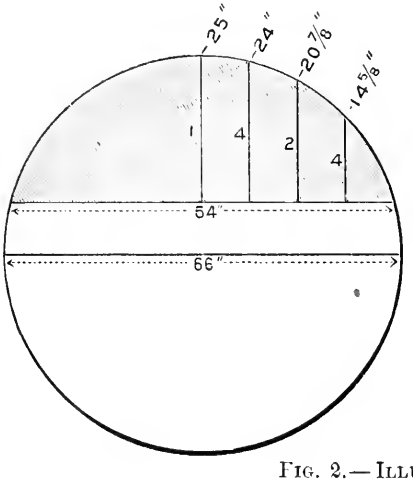

FIG. 2.—ILLUSTRATING RULE II.

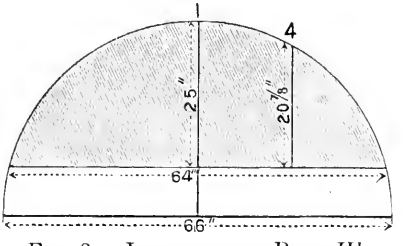

FIG. 3.—ILLUSTRATING RULE III.

the circle, and measure each one of them. Then multiply the middle one by 1, the next one by 4, the next by 2, and the last by 4. Add all the products together, multiply the sum by the base of the segment, and divide by 12. The result is the area of the segment. (Error is never greater than one per cent.)

A similar but very much simpler rule than this may be given, which is never more than four per cent. in error, and which suffices for every practical requirement except in cases in which the greatest possible accuracy is required. It is illustrated in Fig. 3. The base of the segment is divided in halves, and one of these is halved again. Perpendiculars are drawn as before, and these are measured. The shorter one is multiplied by 4, and added to the longer one. The sum is multiplied by the base of the segment, and the product divided by 6. Thus, taking the measurements as given in the cut, $4 \times 20\frac{7}{8}'' = 83\frac{1}{2}''$; $83\frac{1}{2}'' + 25'' = 108\frac{1}{2}''$; $108\frac{1}{2} \times 64 = 6{,}944$; and $6{,}944 \div 6 = 1{,}157$ sq. in.

This process is summed up as follows:

RULE III. Divide the base of the segment into halves, and divide one of these again into halves. Through each point of division draw a perpendicular till it strikes the circle. Measure both perpendiculars, and to the long one add four times the short one. Multiply the sum by the base of the segment, and divide by 6. (The result cannot be in error by more than four per cent.)

The true area, in Figs. 2 and 3, is 1,188 sq. in.; so that Rule II gives a result less than one per cent. too small, and Rule III gives a result about three per cent. too small. Both of these rules are most accurate when the height of the segment is small, and are least accurate when the segment is nearly a semicircle. Rule II is recommended for use in draughting rooms, etc., and Rule III (which is, on the whole, by far the most useful,) is recommended for draughtsmen, engineers, and inspectors.

On Pendulum Measurements.

Although the principles on which the measurement of the earth are based are very simple, yet in putting these principles into practice a great many complicated details have to be taken into account. The circumference of the earth, say at the equator, may be found in the way outlined in THE LOCOMOTIVE for May, 1889; but the *shape* of our planet may be found with far greater accuracy by means of the pendulum.

The facts upon which the pendulum measures are based are simple, and are readily understood; though in making the actual determinations an enormous amount of detail has to be attended to. In the first place, a pendulum, say a yard long, will oscillate fastest where gravity is strongest; and in the next place, if gravity is stronger at one place than at another, we may be sure that there is a bulge on the earth at the place where it is stronger. The first of these facts will be readily admitted. It is the attraction of the earth that makes the pendulum oscillate, and if we should remove the pendulum to some point in space so far away from the sun and the earth and the stars that the attraction of them all together would be inappreciable, it would not vibrate at all, but would remain indefinitely in any position we might put it in. Again, if the attraction of the earth were a thousand times as strong as it is now, we should naturally expect the pendulum to oscillate faster than it does under the present condition of things. There is, then, a relation between the intensity of gravity and the time of vibration of a given pendulum; and investigations, partly experimental and partly theoretical, have shown that the relation is this:

$$g = \frac{(3.1416)^2 \times l}{t^2},$$

where g is the velocity acquired by a falling body at the end of the first second of its fall, and where l is the length of the pendulum in feet, and t is the time, in seconds, that it takes it to make one oscillation.

The second statement made above is not so easily explained. It would seem at first sight as though a point where gravity is specially strong must be nearer the center of the earth than other points where it is less strong. In fact, we have the impression that this is what is usually taught in the high schools and other such institutions, in which the theory of gravitation is set forth to the students in a popular manner. The researches of Clairaut and others do not bear this out, however. If we go up into the air, say, two thousand feet, the attraction of the earth upon us is slightly less than when we are on its surface. Now, if the space beneath us is filled up with mountain ranges of rock, etc., these additional masses of matter exert an appreciable attraction upon us, on account of their nearness; and it appears that the increase in gravity due to these mountains would be much greater than the decrease of gravity due to our elevation above the general surface of the earth, so that in general, when we observe that gravity is stronger than usual in any given place, we may fairly assume that there is a bulge on the earth there

and the amount of the bulge can be calculated by means of rather complicated formulæ when the exact amount of the excess of gravity over its ordinary value is known.

But the purpose of this article is to explain the manner in which the pendulum measurements are made, rather than to investigate the theory of attraction. For simplicity we will confine ourselves to what is known as the "invariable pendulum." This pendulum is made of brass, and is usually either a yard or a meter long. It is taken about to various places on the earth's surface, and the time required for it to make a single oscillation in each place is what the observer tries to find. The pendulums used by Prof. C. S. Peirce in Hoboken, with the writer as his assistant, had been oscillated previously by Captain Heaviside and Major Herschel in Egypt, India, Australia, New Zealand, and other remote places.

First of all, a place for the experiments must be found that is dry and quiet, and where the temperature remains nearly constant. In this place a stout framework is built, which serves to support a heavy copper cylinder about four and a half feet long and twelve to sixteen inches in diameter. Within this cylinder (which is provided with glass windows) the pendulum is hung by means of sharp steel knife edges resting upon agate bearings. Behind the copper cylinder a fine, large astronomical clock is placed, so that the pendulum of the clock and the pendulum of the cylinder may be observed simultaneously through a telescope provided for the purpose, and the time when the experimental pendulum is set in motion may be determined to within less than the hundredth part of a second. The pendulum is then allowed to oscillate for four hours or so, and at the end of this time (so perfect and frictionless is the action of the knife edges and the agate bearings) it is still oscillating sufficiently to determine the instant of stopping with the same precision as the moment of starting. During the four hours the pendulum has made (say) fifteen thousand oscillations; so that by dividing the interval between stopping and starting, as shown by the clock, by fifteen thousand, we find the time required to make one oscillation; and as the error in starting the pendulum was not more than .01 of a second, and the error in stopping it the same, the whole error in determining the time of the fifteen thousand swings cannot be greater than .02 of a second, and the error in the observed time of *one* oscillation cannot be much greater than the fifteen thousandth part of two hundredths of a second — that is, it cannot be more than about one millionth of a second!

Now, the clock that we have compared the pendulum with has probably gained or lost a great deal more than the hundredth of a second during the four hours. More likely it has gained or lost nearly a whole second; and it becomes necessary, therefore, to keep a very careful watch over this clock. For this purpose we had a small astronomical observatory near by, which was connected with the pendulum room by telegraph. In this observatory two very fine chronometers were kept, and by means of an electric chronograph one of these chronometers recorded every second on the same sheet of paper that our astronomical observations were recorded upon. The astronomical observations were made by observing with a transit instrument the apparent time when each of seven or eight different stars crossed the meridian. The difference between these times and the right ascensions of the stars gave us the error of the chronometer, which was then compared electrically with the clock in the pendulum room. But it is impossible to adjust any instrument perfectly, and as our transit was no exception, we had to find out how great its errors of adjustment were, each evening, and make proper allowances for them. Thus we had to introduce corrections for the slight deviation of the axis of the instrument from the horizontal position, and also for its slight deviations from true east and west: the imperfect collimation of the cross-wires had likewise to be taken into account, and to find out what these various errors were we had to go through with a

long calculation for each evening's results, and a laborious reduction by the method of least squares.

The clock in the pendulum room being closely watched in this manner, we were enabled to allow for its slightly erroneous rate; but wearisome as the calculations were, we had, at this point, only begun them. The barometric pressure was read at frequent intervals, and the temperature of the room was taken at the end of each swing, as well as the temperature of the pendulum at the top and bottom. The length of the pendulum had been previously measured with great precision in the United States Coast Survey office, but that was at a different temperature, and we therefore had to apply a correction to allow for the greater length of the pendulum at the slightly higher temperature it had when we used it. Again, the pendulum had been measured while lying in a horizontal position, and we had to apply a correction to allow for the amount by which the pendulum was stretched by its own weight when hung up, as we had it, by one end. Another correction was necessary, too, on account of the fact that the air in the top of the copper cylinder was always a little warmer than that in the bottom. Then we had to take account of the fact that a pendulum goes slightly slower when vibrating through a large arc, than when vibrating through a small one; and a correction was necessary to reduce our measures to what they would have been had the amplitude of the vibration been infinitesimal. Then the agate bearings had to be tested each time with a level, and their deviation from a truly horizontal position allowed for. The bob of the pendulum was hollow and contained some air, which was carried to and fro by the pendulum in its swings, and the momentum of this air had to be allowed for. Again, the pendulum dragged a certain amount of the free air about it along with it, and this and the retarding effect of the eddies produced had also to be taken into account. Another important correction came from the buoyant effect of the air upon the pendulum, this being of the same nature as the buoyant action of water upon wood, only much less in amount, but still quite sensible. Then there was the flexure of the stand, which, though it was stoutly fastened together by bolts, could not fairly be assumed to remain motionless. The pendulum as it swings to and fro will pull the whole stand with it slightly. This action was observed by means of a compound microscope, a glass slip graduated by a dividing engine, and a known weight acting on the framework of the stand by means of a pulley and cord; and a suitable correction was applied.

Perhaps a dozen swings like this were taken, and after each was corrected as indicated, the whole were averaged together, and then everything was repeated with the pendulum the other end up. This completed the measurements with this one pendulum, which was then carefully packed away and the whole process repeated with another one.

Then came the final corrections, which consisted in reducing all to a standard pressure, a standard temperature, and a standard latitude, and in correcting the whole for the five or six feet that we were above the level of the sea. It was proposed to apply another correction to allow for the attraction of the extra volume of water brought into the harbor periodically by the tides; but whether this was finally done or not we cannot say.

We have endeavored, in this article, to call attention to some of the difficulties that are met with in scientific work when it is pushed to the utmost possible limit of refinement; and when we reflect that many measures have been made, similar to the ones here described, the exceeding great labor of determining the shape of the earth by such a method cannot fail to impress us, and the vastness of the job that mankind has voluntarily taken upon himself, solely for the purpose of finding out where the slight humps on his earth are, proves itself to be astounding.

Incorporated 1866.

Charter Perpetual.

Issues Policies of Insurance after a Careful Inspection of the Boilers,

COVERING ALL LOSS OR DAMAGE TO

BOILERS, BUILDINGS, AND MACHINERY.

ALSO COVERING

LOSS OF LIFE AND ACCIDENT TO PERSONS

ARISING FROM

Steam Boiler Explosions.

Full information concerning the plan of the Company's operations can be obtained at the

COMPANY'S OFFICE, HARTFORD, CONN.,

Or at any Agency.

J. M. ALLEN, President. **W. B. FRANKLIN, Vice-Prest.**
J. B. PIERCE, Secretary. **FRANCIS B. ALLEN, 2d Vice-Prest.**
E. J. MURPHY, M. E., Consulting Engineer.

Board of Directors.

J. M. ALLEN, President.
FRANK W. CHENEY, Treas. Cheney Brothers Silk Manufacturing Co.
CHARLES M. BEACH, of Beach & Co.
DANIEL PHILLIPS, of Adams Express Co.
RICHARD W. H. JARVIS, Prest. Colt's Fire Arms Manufacturing Co.
THOMAS O. ENDERS, President of the U. S. Bank.
LEVERETT BRAINARD, of The Case, Lockwood & Brainard Co
GEN. WM. B. FRANKLIN, U. S. Commissioner to the Paris Exposition.
NEWTON CASE, of The Case, Lockwood & Brainard Co.
NELSON HOLLISTER, of State Bank, Hartford.
HON. HENRY C. ROBINSON, Attorney at-Law, Hartford.
HON. FRANCIS B. COOLEY, of the National Exchange Bank, Hartford, Conn.
A. W. HILLSON, late Vice-Prest. Phœnix Fire Ins. Co., Hartford, Conn
EDMUND A. STEDMAN, Treasurer of the Fidelity Co., of Hartford, Conn.
CLAPP SPOONER, Bridgeport, Conn.
GEORGE BURNHAM, Baldwin Locomotive Works, Philadelphia.
HON NATHANIEL SHIPMAN, Judge United States Circuit Court.

A. S. Ferry, General Agent, Office at Hartford, Conn.

GENERAL AGENTS.	CHIEF INSPECTORS.	OFFICES.	
THEO. H. BABCOCK,	R. K. McMURRAY,	NEW YORK CITY.	Office, 285 Broadway.
CORBIN & GOODRICH,	WM. G. PIKE	PHILADELPHIA.	" 430 Walnut St.
LAWFORD & McKIM,	JOSEPH CRAGG,	BALTIMORE, Md.	" 22 So. Holliday St.
C. E. ROBERTS,	WM. U. FAIRBAIRN,	BOSTON, MASS	" 35 Pemberton Sq.
		PROVIDENCE, R. I.	" 29 Weybosset St.
H. D. P. BIGELOW,	H. D. P. BIGELOW,	CHICAGO, ILL	" 112 Quincy St.
C. C. GARDINER,	J. S. WILSON,	ST LOUIS MO.	" 404 Market St.
L. B. PERKINS,	F. S. ALLEN,	HARTFORD.	" 218 Main St.
W. G. LINEBURGH & SON,	J. H. RANDALL	BRIDGEPORT.	" 94 State St.
GEO. P. BURWELL,	C. A. BURWELL,	CLEVELAND.	" 208 Superior St.
MANN & WILSON	J. B. WARNER,	SAN FRANCISCO.	" 306 Sansome St.
ZOLLARS & McGREW,	T. E. SHEARS,	DENVER COL	" Opera House Block.
C. I. McCARY & CO.,	B. F. JOHNSON,	BIRMINGHAM, ALA.	" 2015 First Av.
W. S. HASTIE & SON,		CHARLESTON, S. C.	" 44 Broad St.

The Locomotive.

PUBLISHED BY THE HARTFORD STEAM BOILER INSPECTION AND INSURANCE COMPANY.

NEW SERIES—VOL. XI. HARTFORD, CONN., FEBRUARY, 1890. No. 2.

On Unbraced Wrought-Iron Heads.

It not infrequently happens that the heads of tanks, heaters, and other receptacles containing steam or air under pressure, cannot be braced internally without making the tank less efficient for the purpose for which it is intended, or making it much more difficult to operate. For instance, many heaters contain pans or coils of pipe that would be directly in the way of the braces; and in other appliances, again, braces would be

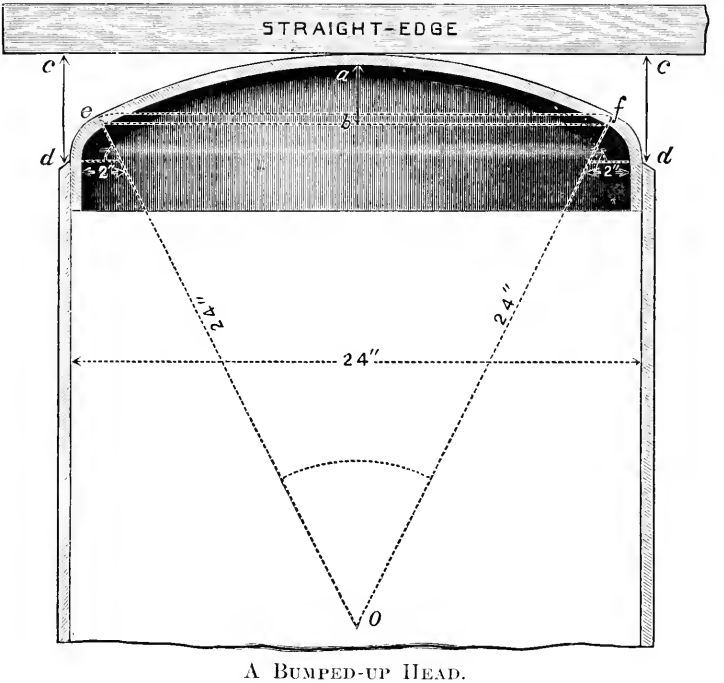

A BUMPED-UP HEAD.

highly objectionable owing to the lodgment of material upon them and the consequent difficulty of emptying the tanks and cleaning them out.

It is desirable, therefore, to construct the heads of these tanks and receivers in such a manner that the requisite strength may be secured without braces. In the first place, it is evident that even if the heads are flat they may be made thick enough to give them any strength desired. Rankine, Grashof, and Lamé have each given a great deal of attention to the subject of flat heads, and have deduced rules for finding the thickness of them. Rankine's rule for flat wrought-iron heads is: "Multiply the pressure on the head, in pounds per square inch, by the square of the radius of the flat part (in inches); divide the result by the tensile strain, in pounds per square inch, that the material of the head

will safely bear, and take the square root of the quotient." This gives the thickness of the head in inches.

Mr. Samuel Nicholls, in his *Theoretical and Practical Boiler-Maker*,* has put this rule into useful shape, but unfortunately there is an error in the rule as he gives it, and in the illustrative example also. It should read something like this: "To find the thickness that a flat, unstayed head should have, multiply the thickness of the shell to which the head is to be attached by the radius of the head (in inches), and take the square root of the product. This gives the thickness that the head must have in order to equal the shell in strength." This rule is identical with Rankine's, except that it is put in a different form. As an example, let us take the following: What thickness of plate shall we require for a flat unstayed dome top, the dome being 36 inches in diameter, and $\frac{3}{8}$ in. thick, in order that the end may be equal in strength to the remainder of the dome? Here the radius is 18 inches; $18'' \times \frac{3}{8}'' = 6.75''$, and $\sqrt{6.75} = 2.6''$ (instead of 1.59 inches, as in Mr. Nicholl's example.)

Very few experiments have ever been made, relative to the strength of flat heads, and our knowledge of them comes largely from theory. It is true that very careful experiments have been made on small plates $\frac{1}{16}$ of an inch thick, yet the data so obtained cannot be considered satisfactory when we come to consider the far thicker heads that are used in steam engineering practice, although the results agreed well with Rankine's formula. Mr. Nicholls, being foreman of a boiler shop in England, has since made some experiments on larger heads, and from them he has deduced the following rule, which will probably work well with heads that do not differ very widely from those he experimented with: "To find the proper thickness for a flat unstayed head, multiply the area of the head by the pressure per square inch that it is to bear safely, and multiply this by the desired factor of safety (say 8); then divide the product by ten times the tensile strength of the material used for the head."† His rule for finding the bursting pressure when the dimensions of the head are given is: "multiply the thickness of the end plate in inches by ten times the tensile strength of the material used, and divide the product by the area of the head in inches."

In Mr. Nicholls's experiments the average tensile strength of the iron used for the heads was 44,800 lbs. The results he obtained are given below, the bursting pressure being calculated in each case, both by Nicholls's rule and by Rankine's, for the purpose of comparison.

1. An unstayed flat boiler head is $34\frac{1}{2}$ inches in diameter and $\frac{9}{16}$ inch thick. What is its bursting pressure? The area of a circle $34\frac{1}{2}$ inches in diameter is 935 sq. inches; then $\frac{9}{16} \times 44{,}800 \times 10 = 252{,}000$, and $252{,}000 \div 935 = 270$ lbs., the calculated bursting pressure according to Nicholls's rule. The head actually burst at 280 lbs. (Rankine's formula gives only 43 lbs. as the bursting pressure.)

2. An unstayed flat head is $34\frac{1}{2}$ inches in diameter and $\frac{3}{8}$ inches thick; what is its bursting pressure? The area of the head being 935 square inches as before, we have $\frac{3}{8} \times 44{,}800 \times 10 = 168{,}000$, and $168{,}000 \div 935 = 180$ lbs., which is the bursting pressure according to Nicholls's rule. This head actually burst at 200 lbs. (Rankine's formula gives only 21 lbs. as the bursting pressure.)

3. An unstayed flat head is $26\frac{1}{4}$ inches in diameter, the plate being $\frac{3}{8}$ inches thick; what is its bursting pressure? The area of a circle $26\frac{1}{4}$ inches in diameter is 541 square inches. Then, proceeding as before, we have $\frac{3}{8} \times 44{,}800 \times 10 = 168{,}000$, and $168{,}000 \div 541 = 311$ lbs., the bursting pressure according to Nicholls's rule. This head burst at 370 lbs. (Rankine's formula gives only 36 lbs. as the bursting pressure.)

4. A flat unstayed head is $28\frac{1}{2}$ inches in diameter and $\frac{3}{8}$ inches thick; what is its

* New York, 1882, p 126.

† The formula from which this rule is taken is given on p. 146 of Mr. Nicholls's book. In this formula the denominator should be C × T.

bursting pressure? The area of this head is 638 square inches. We have, therefore, $\frac{3}{8}\times 44,800\times 10=168,000$, and $168,000\div 638=263$ lbs., the bursting pressure according to Nicholls's rule. The actual bursting pressure was 300 lbs. (Rankine's formula gives only 31 lbs. as the bursting pressure.)

Looking over these results we perceive several important points. In the first place it is evident that Rankine's rule gives results that are very discordant with the facts. Again, it is plain that Nicholls's rule gives results that agree with the facts very well indeed. It might be objected, of course, that though the heads might not burst *immediately* at the pressure given by Rankine's formula, yet they might ultimately fail, after being in use for a sufficient length of time. Certain facts observed by Mr. Nicholls in connection with the heads described above indicate, however, that this is not the case. For instance, in the third experiment, where the pressure reached 10 lbs., the end had bulged $\frac{1}{32}$ of an inch; at 20 lbs. it had bulged $\frac{1}{16}$ inch; at 40 lbs., $\frac{1}{8}$ inch; at 60 lbs., $\frac{3}{16}$ inch; at 80 lbs., $\frac{1}{4}$ inch; at 100 lbs., $\frac{5}{16}$ inch; at 120 lbs., $\frac{3}{8}$ inch; at 140 lbs., $\frac{1}{2}$ inch; at 155 lbs., $\frac{9}{16}$ inch; at 170 lbs., $\frac{5}{8}$ inch; at 185 lbs., $\frac{11}{16}$ inch; at 200 lbs. the bulge was exactly $\frac{3}{4}$ of an inch. "The pressure was now reduced to zero," says Mr. Nicholls, "and the end sprang back $\frac{3}{16}$ inch, leaving it with a permanent set of $\frac{9}{16}$ inch. The pressure of 200 lbs. was again applied on 36 separate occasions during an interval of five days, the bulging and permanent set being noted on each occasion, but without any appreciable difference from that noted above." That is, as we understand it, no tendency to increase in the set could be detected.

It must be remarked, however, that the experiments we have described were confined to plates not very widely different in their dimensions, so that even Mr. Nicholls's rule cannot be relied upon for heads that depart very much from the proportions given in the example above.

It will be seen that, considering the discrepancy in the various rules, and the insufficiency of the data available, our knowledge of the strength of flat unstayed heads is very meager; and the moral is, as in all other such cases in engineering practice, that we should avoid such heads whenever it is possible to do so, and should use in the place of them something that we know more about. Bumped up heads, like that shown in the illustration, are therefore recommended in cases where braces cannot be used.

In the construction of such heads the plate is flanged as usual, (after being bumped as described below,) the curve at *DE* and *FD* having a radius of not less than two inches. The rest of the head is bumped into spherical shape, as shown at *EAF*, the dotted lines *EBF* showing the position of the head before the operation. To get at the radius *OE*, that the bumped portion should have, let us consider the following well-known rules for finding the proportions of cylindrical and spherical shells:

Rule I. To find the pressure that an ordinary boiler shell will safely bear, multiply the tensile strain that the material will safely bear by twice the thickness of the shell, and divide the result by the *diameter* of the shell.

Rule II. To find the pressure that a spherical shell will safely bear, multiply the tensile strain that the material will safely bear by twice the thickness of the shell, and divide the result by the *radius* of the shell.

The wording of these rules, as here given, is a little different from the ordinary wording, but they amount to the same thing, and the change is made in order to make the truth of the following statement a little more plain. It will be seen by examining them, that in order to make the spherical part of the head, *EAF*, equal in strength to the shell of the boiler or tank, it is only necessary to make the *radius*, *OE*, of the spherical part, equal to the *diameter* of the boiler or tank. In the cut (which represents a steam dome), the diameter of the dome is 24 inches, and the radius of the bumped-up part of the head, therefore, is also 24 inches.

For the convenience of inspectors and others, who may wish to measure the amount

of bumping in such a head, we have calculated the following table, which gives the proper amount of bumping for shells of various diameters:

Diameter of Shell.	CD.	AB.	Diameter of Shell	CD.	AB.
18″	$4\frac{1}{8}$″	$2\frac{1}{8}$″	38″	$6\frac{3}{4}$″	$4\frac{3}{4}$″
20″	$4\frac{3}{8}$	$2\frac{3}{8}$	40″	$7\frac{1}{8}$	$5\frac{1}{8}$
22″	$4\frac{5}{8}$	$2\frac{5}{8}$	42″	$7\frac{3}{8}$	$5\frac{3}{8}$
24″	$4\frac{7}{8}$	$2\frac{7}{8}$	44″	$7\frac{5}{8}$	$5\frac{5}{8}$
26″	$5\frac{1}{4}$	$3\frac{1}{4}$	46″	$7\frac{7}{8}$	$5\frac{7}{8}$
28″	$5\frac{1}{2}$	$3\frac{1}{2}$	48″	$8\frac{1}{8}$	$6\frac{1}{8}$
30″	$5\frac{3}{4}$	$3\frac{3}{4}$	50″	$8\frac{3}{8}$	$6\frac{3}{8}$
32″	6	4	52″	$8\frac{5}{8}$	$6\frac{5}{8}$
34″	$6\frac{1}{4}$	$4\frac{1}{4}$	54″	9	7
36″	$6\frac{1}{2}$	$4\frac{1}{2}$	56″	$9\frac{1}{4}$	$7\frac{1}{4}$

The easiest way to use the table is by laying a straight-edge along the head, as shown in the cut, and measuring the distance, *CD*, from the straight-edge down to the point where the shell joins the head. This measurement should be made on both sides of the head, for it is not easy to lay the straight-edge on perfectly level; and if any difference is found in the measures so taken, the average of the two should be taken. If the upper edge of the shell is a little irregular it may be well to try the straight-edge in several positions. After a good measurement of the height *CD* is obtained, it should be compared with the table above, which gives the correct measurement for shells of different diameters. If the measured height falls short of the tabular one, the head is not bumped enough. If it exceeds that given in the table, the head still being spherical in shape, no harm can result, as the only effect is to make the head a little stronger than necessary.

The distance *AB* is likewise given in the table, as it is often of use.

Inspectors' Reports.

DECEMBER, 1889.

During this month our inspectors made 4,986 inspection trips, visited 9,738 boilers, inspected 3,875 both internally and externally, and subjected 557 to hydrostatic pressure. The whole number of defects reported reached 9,029, of which 822 were considered dangerous; 41 boilers were regarded unsafe for further use. Our usual summary is given below:

Nature of Defects.	Whole Number.	Dangerous.
Cases of deposit of sediment,	478	32
Cases of incrustation and scale,	921	36
Cases of internal grooving,	40	11
Cases of internal corrosion,	366	43
Cases of external corrosion,	593	42
Broken and loose braces and stays,	153	28
Settings defective,	266	37
Furnaces out of shape,	321	22
Fractured plates,	195	64
Burned plates,	154	23
Blistered plates,	317	12

Nature of Defects.	Whole Number.	Dangerous.
Cases of defective riveting,	2,201	44
Defective heads,	82	12
Serious leakage around tube ends,	1,785	251
Serious leakage at seams,	375	28
Defective water-gauges,	172	32
Defective blow-offs,	76	17
Cases of deficiency of water,	9	7
Safety-valves overloaded,	47	21
Safety-valves defective in construction,	58	22
Pressure gauges defective,	308	34
Boilers without pressure gauges,	2	2
Unclassified defects,	110	2
Total,	9,029	822

Summary of Inspectors' Reports for the Year 1889.

The following is the analysis in detail of defects reported during the year 1889:

Nature of Defects.	Whole Number.	Dangerous.
Cases of deposit of sediment,	6,165	396
Cases of incrustation and scale,	10,227	477
Cases of internal grooving,	580	111
Cases of internal corrosion,	3,499	294
Cases of external corrosion,	7,179	542
Broken and loose braces and stays,	1,520	370
Settings defective,	2,577	253
Furnaces out of shape,	3,235	161
Fractured plates,	2,124	746
Burned plates,	1,627	288
Blistered plates,	3,519	187
Cases of defective riveting,	27,871	795
Defective heads,	1,097	207
Serious leakage around tube ends,	19,788	1,599
Serious leakage at seams,	4,628	401
Defective water-gauges,	2,290	331
Defective blow-offs,	934	237
Cases of deficiency of water,	175	79
Safety-valves overloaded,	542	167
Safety-valves defective in construction,	713	221
Pressure-gauges defective,	3,577	376
Boilers without pressure-gauges,	49	49
Miscellaneous defects,	1,271	133
Total,	105,187	8,420

In accordance with our usual custom we also present, herewith, a condensed summary of the work done by the inspectors during the past year, and, for comparison, we give the corresponding summary for 1888:

	1888.	1889.
Visits of inspection made,	51,483	56,752
Total number of boilers inspected,	102,314	110,394
" " " " " internally,	40,240	44,563

	1888.	1889.
Total number of boilers tested by hydrostatic pressure,	6,536	7,187
" " " defects reported,	91,567	105,187
" " " dangerous defects reported,	8,967	8,420
" " " boilers condemned,	426	478

A comparison of the results of inspection during 1889, with those for previous years, is given in the following table. A study of it shows many interesting facts concerning the growth of the company during the past eight years:

SUMMARY OF INSPECTORS' WORK SINCE 1881.

YEAR.	Visit of Inspection Made.	Whole Number of Boilers Inspected.	Complete Internal Inspections.	Boilers Tested by Hydrostatic Pressure.	Total Number of Defects Discovered.	Total Number of Dangerous Defects Discovered.	Boilers Condemned.
1882	25,742	55,679	21,428	4,564	33,690	6,867	478
1883	29,324	60,142	24,403	4,275	40,953	7,472	545
1884	34,048	66,695	24,855	4,180	44,900	7,449	493
1885	37,018	71,334	26,637	4,809	47,230	7,325	449
1886	39,777	77,275	30,868	5,252	71,983	9,960	509
1887	46,761	89,994	36,166	5,741	99,642	11,522	622
1888	51,483	102,314	40,240	6,536	91,567	8,967	426
1889	56,752	110,394	44,563	7,187	105,187	8,420	478

The following table also is of interest. With the year 1889, the number of inspections made by this company passed the million mark; and the number of separate visits of inspection now exceeds half a million:

GRAND TOTAL OF THE INSPECTORS' WORK SINCE THE COMPANY BEGAN BUSINESS, TO JANUARY 1, 1890.

Visits of inspection made,	507,014
Whole number of boilers inspected,	1,012,290
Complete internal inspection,	374,910
Boilers tested by hydrostatic pressure,	71,683
Total number of defects discovered,	719,327
" " " dangerous defects,	110,409
" " " boilers condemned,	6,200

Boiler Explosions.

DECEMBER, 1889.

SAW-MILL (162). The steam saw-mill of William H. Jackson & Son, located along the New York, Philadelphia & Norfolk Railroad, a half mile north of Marion Station, was wrecked by an explosion on December 5th. The explosion occurred at a time when the men were lying around on the sawdust about the furnace, having just finished dinner. Of the nine persons in the mill, none escaped injury. The killed and injured are as follows: William Dennis, a sawyer, aged 21 years, instantly killed; William Dixon, aged 71, fatally injured — leg and arm broken, and lower part of face blown off

and one eye gone; George Jones, attendant at lever, scalded badly and face injured; Richard Martin, edge sawyer, scalded and foot blown off; Levin Tull, hauler, scalded; Samuel Lowe, hauler, scalded all over, very seriously; Henry Howard, attorney-at-law, badly scalded and wounded in the leg; Edward Townsend, fireman, face and body scalded; John M. Wimbrow, mill manager, wounded in leg and bruised about face. The mill is a total loss.

Saw-Mill (163). On the morning of December 9th the immense boiler in the saw-mill of Dean & King, at King's Station, near Birmingham, Ala., exploded, killing engineer James Carrington and fireman G. W. Robinson, and seriously injuring Henry Palmer by breaking his legs and arms. The mill is a complete wreck.

Locomotive (164). On December 11th, at Pottsboro, Tex., on the Fort Worth Division of the Missouri, Kansas & Texas Railway, a north-bound freight train was standing on the siding, when the crown sheet of the engine blew out with a loud report. S. R. Wolfolk, head brakeman, was hurled from the tender and landed on the ground. He was quite seriously scalded. James Horton, fireman, was also seriously scalded.

Saw-Mill (165). The large tubular boiler at Randall Brothers & Co.'s saw-mill, at Covington, Tenn., exploded on December 13th, completely demolishing the building and killing fireman Jones and Mr. Stewart, one of the firm. Two of the employees were seriously injured.

Gin-House (166). A boiler exploded on December 13th, near Arlington, a few miles north of Memphis, Tenn. It was attached to the steam gin-house of Mr. J. L. Cody, and the explosion tore the building to pieces, and wrecked everything in the vicinity. A negro was delivering a load into the gin-house at the moment, and he and his team of two mules were killed outright. Mr. Cody, the proprietor, was also in the vicinity, superintending some work about the premises, and but for the fact that a large pile of cotton-seed intervened between him and the boiler, he would have been a victim also.

Candle Factory (167). Mr. H. Gross owns and runs a candle factory at Provost and First Streets, Jersey City. In the rear of the two-story brick building in which the main work of the establishment is done was a shed that covered the boiler. On the afternoon of December 16th the boiler exploded and blew the shed into atoms. A fragment of the boiler was hurled across the street, and buried itself in the wall of a liquor saloon. A digester with 1,000 gallons of hot tallow in it was overturned, and the tallow ran over everything. In the room at the time were Fritz Greenwell, the fireman, and Rudolph Brockess and Frederick Kalcke, who were employed in the factory. Greenwell was thrown across the yard, his body pierced by a dozen fragments of the boiler. One of the pieces had penetrated his brain, and his body was lifeless when it was picked up. Brockess was also struck in the side by a flying piece, but he escaped fatal injuries. Kalcke was scalded by the scattered tallow, but it is thought that he will recover. Greenwell lived at Essex and Green Streets, and leaves a family.

Locomotive (168). As the New Jersey Central engine No. 96, with a train of cars, was standing near Matawan Junction, on December 24th, the engine exploded and hurled engineer Johnson and fireman Lyons some fifty feet away. Lyons was somewhat injured. Johnson escaped injury. Débris of the wreck was hurled to a distance of 500 yards, landing among a crowd of men working in Dater's brickyard, pieces striking the telegraph wires and poles, cutting the latter down. The explosion was heard for some miles.

Saw-Mill (169). On December 26th the boilers in Neff Crothers' mill, seven miles

east of Edmore, Mich., blew up, killing foreman E. Stedman, breaking every bone in his body, seriously injuring engineer John Welch and Charles Saunders, and slightly injuring Charles Bowen.

COAL MINE (170). The boiler of an engine at Zeiger's coal mine, three miles east of Alliance, O., exploded on December 27th, fatally scalding the engineer, Thomas Woolman. The explosion resulted from mineral in the water corroding the boiler, which was nearly new, and doing the work of two, the other having exploded a week ago. [See editorial, page 26.]

SUMMARY OF BOILER EXPLOSIONS FOR THE YEAR 1889.

Our usual summary and classified list of explosions during the year is presented herewith. The total number of explosions, so far as we have been able to learn, was 180. In several instances more than one boiler exploded at the same time. Where this has been the case we have counted each boiler separately, as in our summary for 1888, believing that by so doing we can convey a fairer conception of the amount of damage done during the year. It is difficult to make up an accurate list of the killed and injured, as in many cases the newspaper reports (upon which we largely depend in making up our monthly lists), are rather indefinite. We have carefully examined the accounts of each explosion, however, and have done our best to make the summary as fair as possible.

CLASSIFIED LIST OF BOILER EXPLOSIONS IN THE YEAR 1889.

CLASS OF BOILER.	January.	February.	March.	April.	May.	June	July.	August.	September.	October	November.	December.	Totals.
1. Saw-mills and other Wood-working Establishments,	7	3	5	5	2	1	5	6	3	12	3	4	56
2. Locomotives,	1	1	...	2	1	...	2	1	1	3	1	2	15
3. Steamships, Tugs, and other Steam Vessels,	1	1	...	1	1	...	2	1	1	2	3	...	13
4. Portable Boilers, Hoisters, and Agricultural Engines,	2	1	...	2	1	...	3	4	1	5	2	...	21
5. Mines, Oil Wells, Collieries,	...	1	2	...	...	...	...	1	1	2	1	1	9
6. Paper Mills, Bleacheries, Digesters, etc.,	...	...	1	..	2	...	1	...	...	...	..	...	4
7. Rolling Mills and Iron Works,	1	2	3	...	1	1	...	2	...	1	3	...	14
8. Distilleries, Breweries, Dye-Works, Sugar Houses, and Rendering Works,	...	...	...	...	...	2	1	1	1	1	2	...	8
9. Flour Mills and Grain Elevators,	1	...	2	1	...	...	..	...	...	..	...	...	4
10. Textile Manufactories,	2	1	1	...	...	...	...	...	...	..	...	.	4
11. Miscellaneous,	3	4	3	3	1	1	3	..	6	2	4	2	32
Total per month,	18	14	17	14	9	5	17	16	14	28	19	9	180
Persons killed (total, 304), " "	27	45	18	15	7	6	28	27	34	66	21	10	
Persons injured (total, 433), " "	40	33	66	24	18	13	105	36	13	48	19	18	

It should be understood that this summary does not pretend to include *all* the explosions of the year. In fact it probably includes but a small fraction of them. Many accidents have undoubtedly happened that were not considered by the newspapers to be sufficiently "newsy" to interest the general public, and many others have, without question, been reported in local papers that we do not see.

We are pleased to report that the explosions during 1889 have been markedly less than those of 1888, and that the list of killed and injured is likewise smaller. The number of persons killed outright, or who died within a very short time, was 304 during 1889, against 331 in 1888, 264 in 1887, and 254 in 1886; and the number injured was 433, against 505 in 1888, 388 in 1887, and 314 in 1886. The total of those killed and injured during the year 1889 was 737.

The most disastrous explosions of the year was as follows: On February 18th a tubular boiler of about sixty nominal horse power exploded in the basement of the Park Central Hotel, in this city, demolishing the hotel almost entirely, killing 23 outright, and seriously injuring 10 others. This explosion was the subject of illustration in the March issue of the LOCOMOTIVE. On October 3d, the Mississippi River steamer *Corona* burst her boilers when opposite Port Hudson. She was utterly destroyed by this explosion, and thirty-six lives were lost. Ten persons were also seriously hurt. On October 12th, five boilers exploded in Hughes' planing mill at Chattanooga, killing one man and injuring another, and causing a property loss of $13,514.75.

The Medicines of Former Days.

In the February number of *Harper's Magazine*, Mark Twain gives some curious extracts from a long-forgotten *Dictionary of Medicine*, by Dr. James, of London, assisted by Dr. Samuel Johnson. Following are two of the most efficacious receipts: "Under this head we have 'Alexander's Golden Antidote,' which is good for—well, pretty much everything. It is probably the old original first patent medicine. It is built as follows: 'Take of afarabocca, Henbane, Carpobalsamum, each two drams and a half; of Cloves, Opium, Myrrh, Cyperus, each two drams; of Opobalsamum, Indian Leaf, Cinamon, Zedoary, Ginger, Croftus, Coral, Cassia, Euphorbium, Gum Tragacanth, Frankincense, Styrax Calamita, Celtic, Nard, Spignel, Hartwort, Mustard, Saxifrage, Dill, Anise, each one dram; of Xylaloes, Rheum Ponticum, Alipta Moschata, Castor, Spikenard, Galangals, Opoponax, Anacardium, Mastich, Brimstone, Peony, Eringo, Pulp of Dates, red and white Hermodactyls, Roses, Thyme, Acorns, Penyroyal, Gentian, the Bark of the Root of Mandrake, Germander, Valerian, Bishops Weed, Bay-Berries, long and white Pepper, Xylobalsamum, Carnabadium, Macodonian, Parsley-seeds, Lovage, the Seeds of Rue, and Sinon, of each a dram and a half; of pure Gold, pure Silver, Pearls not perforated, the Blatto Byzantina, the Bone of the Stag's Heart, of each the quantity of fourteen Grains of Wheat; of Sapphire, Emerald, and Jasper stones, each one dram; of Hasle-nut, two drams; of Pellitory of Spain, Shavings of Ivory, Calamus Odoratus, each the quantity of twenty-nine Grains of Wheat; of Honey or Sugar, a sufficient quantity.'

"'*Aqua Limacum.* Take a great Peck of Garden-snails, and wash them in a great deal of Beer, and make your Chimney very clean, and set a Bushel of Charcoal on Fire; and when they are thoroughly kindled, make a Hole in the Middle of the Fire, and put the Snails in, and scatter more Fire amongst them, and let them roast till they make a Noise; then take them out, and, with a Knife and coarse Cloth, pick and wipe away all the green Froth; then break them, Shells and all, in a Stone Mortar. Take also a Quart of Earth-worms, and scour them with Salt, divers times over. Then take two Handfuls of Angelica and lay them in the Bottom of the Still; next lay two Handfuls of Celandine; next a Quart of Rosemary-flowers; then two Handfuls of Bears-foot and Agrimony; then Fenugreek; then Turmerick; of each one Ounce; Red Dock-root, Bark of Barberry-trees, Wood-sorrel, Betony, of each two Handfuls.—Then lay the Snails and Worms on the Top of the Herbs; and then two Handfuls of Goose-dung, and two Handfuls of Sheep-dung. Then put in three Gallons of Strong Ale, and place the Pot where you mean to set Fire under it: Let it stand all Night, or longer; in the Morning put in three Ounces of Cloves well beaten, and a small quantity of Saffron, dry'd to Powder; then six Ounces of Shavings of Hartshorn, which must be uppermost. Fix on the Head and Refrigeratory, and distil according to Art.'"

The Locomotive.

HARTFORD, FEBRUARY 15, 1890.

J. M. ALLEN, *Editor.* A. D. RISTEEN, *Associate Editor.*

THE LOCOMOTIVE *can be obtained free by calling at any of the company's agencies.*
Subscription price 50 *cents per year when mailed from this office.*
Bound volumes one dollar each.

Papers that borrow cuts from us will do us a favor if they will plainly mark them in returning, so that we may give proper credit on our books.

IN the December issue of THE LOCOMOTIVE, we accidentally omitted to state that Mr. Harrison's paper on the Manchester Ship Canal (which was first published in the San Francisco *Weekly Commercial News and Insurance Record* for Oct. 25, 1889), was read before the *San Francisco* Association of Marine Underwriters. Our attention having been called to this omission, we make the correction with pleasure.

BUTTER is now made from cocoa-nut oil in Germany, and the demand for it is increasing steadily in the hospitals and among the poor. The butter so produced is nearly white. It contains over 99.99 per cent. of fat, the rest being water and mineral matter; and it melts at 80° Fah. We see no reason why such an article may not be used to advantage in the place of ordinary butter, for in the first place it is cheaper, and in the second place (which is vastly more important), it is entirely vegetable, and therefore cannot contain consumption bacilli, nor any other kind of germs, which animal butter often does contain, when the creatures from which the milk is obtained are not healthy.

AMONG the boiler explosions reported in this issue is one at Alliance, Ohio, in the account of which we have preserved the phraseology of the newspaper man who reported it. The closing words of the account are delicious. "The explosion," it says, "resulted from mineral in the water corroding the boiler, which was nearly new, and doing the work of two, the other having exploded a week ago." A lively time they have been having out there, for sure; yet how calmly and unconcernedly the reporter speaks of it! Ordinarily we should expect to hear that "the air was filled with sections of shell, fragments of broken heads and braces, and vast clouds of rivets and tubes"; but in this case the populace seems to have been surfeited with such things, and an explosion or two, more or less, makes but little difference — except to the unfortunate engineer and his family.

WE made a brief allusion to the influenza in the last issue of the LOCOMOTIVE. In fact, we said all we could, at that time, without using intemperate language. But thanks to quinine, antipyrine, Warburg's tincture, and sulphur dioxide, we are now in position to discuss it in an editorial and impersonal manner. The first historical migration of the influenza is said to have taken place in 1510; and since that time more than a hundred general epidemics of it have been recorded in Europe, in addition to nearly as many more that were local. It is popularly supposed to have its home in Russia; but the Russians insist that Asia is its true stamping ground. If this is the case, it is plain that the course of empire is not the only thing that takes its way westward. From some

heathen area in China the affliction spreads to Russia, then to Germany, Italy, France, Spain, and England, then to New York and Boston, and then "'cross country" till the Pacific stops it.

On January 2, 1782, the thermometer at St. Petersburg suddenly rose from 3° F. below zero to 37° above; and simultaneously with this rise in temperature 40,000 people were taken down with the grip. Having made so auspicious a start, the distemper spread rapidly all over Europe, fully half the population of the continent being attacked by it. In 1830, another epidemic started up in China, and in January, 1831, Russia was suffering with it. In the following spring Germany and France had their turn at it, and in June, England followed. Other epidemics occurred in 1833, 1836, 1837, and 1847.

It would be interesting to know whether we are to have such a succession of afflictions following the present attack.

Kilima-Njaro Scaled at Last.

We learn from the *New York Sun* that Kilima-Njaro, the highest mountain peak in Africa, has at last been climbed, and the flag of Germany planted on its loftiest summit. The mountain was discovered forty years ago by a missionary named Rebmann, and since that time six attempts have been made to climb it. In most of these attempts the explorers found their native attendants of no service whatever above the snow line, and in several instances it was found impossible to induce them to enter the region of snow at all. Dr. Hans Meyer is the successful man, and this is his second attempt. What must have been his emotions, when, "at an elevation of 19,680 feet, he stood on the highest point of the Dark Continent"!

"The six attempts to put Kilima-Njaro beneath the feet of the mountaineer," says the *Sun*, "have been scattered over a period of twenty-two years. Mr. New barely reached the lower edge of the snow line. Mr. H. H. Johnston pushed through the mists and snow-drifts to within nearly 2,000 feet of the summit, and then had to give it up. An accident to him meant almost certain death, for his black comrades were shivering around a fire 5,000 feet below. Count Teleki rested a fortnight on the slope of the mountain to gather strength for the ascent, but after all he failed to reach the top of Kibo [the higher of the two peaks.] Meyer tramped to the height of 19,000 feet till he was brought up short by a glacier ice wall which he was unable to scale owing to the desertion of his native followers, and to the exhaustion of his one white companion, who was completely worn out by the long struggle over the snow-clad lava fields in the rarified air. Ehlers spent two days above the snow line, most of the last day alone, for his five negroes, throwing themselves down in the snow, declared that they wished to die. . . . Other feats of snow climbing await the mountaineers in that country of wonderful contrasts, where a few miles below the region of eternal winter there are palm trees, banana fields, and endless summer."

A MAN weighing 300 pounds, and as round as a foot-ball, ran screaming from the dye house at 2,546 Cottage Grove Avenue yesterday morning. His form glistened like steel as he rushed to the drug store at Twenty-sixth Street and Cottage Grove Avenue. His rotund form was completely covered with pins, which were sticking deep in every portion of his anatomy. "Get a tack hammer and pull these pins out quick!" shouted the fat man, who was Henry Wing. Then he told how the boiler head in the dye-house of which he is the proprietor, had blown out and scattered a box of pins standing near with such force that he was literally stuck full of them from head to foot, giving him the appearance of an animated pincushion. The clerk went to work as if he were pulling

tacks, and managed to extract several papers of pins from the fat man's body. At each pull of the hammer Wing uttered a groan of anguish. Finally the last tormentor was extracted, and the sufferer breathed easier.— *Chicago Tribune.*

The History of the Great American Lakes.*

BY PROF. J. S. NEWBERRY.

At the close of the carboniferous age, all that part of the continent of North America lying between the Mississippi and the Atlantic was raised out of the ocean and has remained a land area to the present time. The sea has risen and fallen on its shores, leaving there the sediments, which accumulated when the water stood high, and remain as the cretaceous and tertiary margin of the highland. At other times the sea level was many hundred feet lower than now. Then the Ottawa, the Hudson, the Delaware, the Potomac, and James rivers ran down with swift currents to the ocean, excavating deep valleys which now in another subsidence are filled with backwater, and have become the tideways by which the coast is fringed. By the elevation of the Alleghanies, a valley was formed between them and the Canadian and Adirondack highlands. This valley was drained by a great river now represented by the St. Mary, Detroit, Niagara, and St. Lawrence, but during most of its existence it flowed to the ocean by way of New York, and as we know by its now submerged trough, its mouth was eighty miles south and east of New York harbor. For countless ages this river carried off the surplus water of a great drainage area, and as the continent was high and its current rapid, it cut down its bed in a continuous gorge many hundred feet in depth, reaching from the basin of Lake Superior to the narrows below New York, where it flowed out on to a broad littoral plain. Between the Adirondacks and the Helderberg mountains, this great river, which had no name and no human eyes beheld, cut a barrier, the principal impediment to its progress, and formed a water gap, that in its influence on human history is the most important topographical feature on the continent; for this is the great gate through which the tide of humanity flowed from the coast to the interior, and where the most important canal and railroad lines in the world have been laid.

Up to the close of the tertiary age, our great lakes had no existence. Then came the ice period, when the whole aspects of nature were revolutionized. Over more than half the continent snow fields took the place of the luxuriant forests which had before reached to the Arctic Ocean, and glaciers extended southward to New York, Cincinnati, and St. Louis. As the cold increased, local glaciers were formed on the southern slope of the Canadian highlands. These gradually extended down the tributaries of the great river before described, ultimately occupying and greatly modifying its valley, locally scooping out great basins by a kind of erosion which is characteristic of ice, but never produced by water. Finally, the great valley was filled with ice, that overtopped its southern margin in Ohio and Indiana, and reached high up on to the Alleghanies in Pennsylvania. For untold centuries the ice, sometimes thousands of feet in thickness, moved on, planing off or rounding over all eminences, filling pre-existing gorges with debris, and completely remodeling the topography. When the climate became milder, the great ice sheet retreated, leaving a coating of moranic material over a million of square miles, where it averages not less than fifty feet in thickness. This filled and obliterated a large number of pre-existent river valleys, some of which are being re-excavated by the draining streams; in other cases they have abandoned their ancient valleys and have found lines of lower level elsewhere. The changes made in the valley of our great river were most important. In places deep and broad rock basins had been

* Abstract of a paper read before the American Association for the Advancement of Science at Toronto.

excavated, in other places its channel had been so filled with drift material that it was compelled to choose new routes. The basins partly excavated by water and ice, partly the result of damming, are our great lakes, and the new channels are those of the rivers St. Mary, the Niagara, and the St. Lawrence. A bank of drift on the south shore of Lake Superior, east of the Pictured rocks, turned the flow of water over the rocky barrier at the east end of the lake, and formed the falls of St. Mary. A similar bank of drift obliterated the channel between Lake Erie and Lake Ontario and turned the water over the Lewiston ridge, and formed the cataract of Niagara. A still more important change was made by the filling up of the old valley of the Mohawk, by which the river was compelled to find a new outlet from the northeast corner of Lake Ontario through the rocky and shallow channel of the St. Lawrence.

No one has ever reached the rocky bottom of the Mohawk Valley, but the drift material which occupies it has been penetrated far below the ocean level. The rocky ledge over which the Mohawk pours at Little Falls has been cited as proof that the great river never flowed through this valley; but this is a case similar to that of the Niagara, the St. Mary's, and the Ohio at the Falls. The ancient channel is near, but so completely filled that the water has been deflected over a spur of rock projecting from the south side of the valley. The evidence cannot all be given here, but it is such as must convince every intelligent man that there was once a continuous line of drainage from the highland north of Lake Superior to the ocean near New York, and that the changes that were made by the ice period in the valley of the great river which flowed along this channel have given us our chain of great lakes.—*Engineering and Mining Journal.*

On Photography in Natural Colors.

From the time when the first photographic image was impressed on a plate in permanent form, experimenters have been at work on the problem of obtaining pictures in natural colors. The first difficulty that presents itself is that red and other colors of low refrangibility, although producing an impression on the eye, have little or no effect on the plates that are used in photography. This defect has now been very satisfactorily overcome by staining the plates with some coloring material before exposing them, or by some similar artifice; and with the "orthochromatic" plates so prepared very satisfactory results can be obtained, the only objection being that a very long exposure is necessary. Orthochromatic plates do not give a colored image, but in taking views of autumn foliage, for example, the reds and other colors of low refrangibility leave an impression that is proportionate to the effect they produce on the eye, and the resulting picture looks correct as far as light and shade are concerned.

The following, the substance of which we take from Dr. Vogel's *Chemistry of Light and Photography*, will give a good idea of what has thus far been done in producing pictures having the colors of nature: Herschel and Seebeck attacked the problem in the early part of the present century, but with little success so far as practical picture-taking is concerned. Bequerel, who was the next experimenter in this line, worked with a silver plate, which he prepared by first suspending it in a bath of muriatic acid, attaching it to the positive pole of a battery, and immersing another plate, attached to the negative pole, in the same bath. The muriatic acid was decomposed into hydrogen and chlorine, the latter being deposited on the plate to be prepared. The chlorine so deposited combined with the silver, producing a brownish sub-chloride, which is sensitive to light, and gives a colored image after long exposure.

Nièpce de St. Victor worked on this subject from 1851 to 1867. He worked, like Bequerel, with silver plates, which he chlorinated by immersion in a solution of the chlorides of iron and copper, and then heated them strongly. He thus obtained plates which appeared ten times more sensitive then Bequerel's, and allowed him to make

pictures of engravings, flowers, church windows, and other colored objects. He relates that he not only obtained the colors of objects in his pictures, but that gold and silver retained their metallic splendor, and the picture of a peacock's feather the luster of nature. Nièpce de St. Victor introduced a further improvement, by covering the plate of chloride of silver with a peculiar varnish, consisting of dextrine and a solution of chloride of lead. This coating made the plate still more sensitive and durable, and at the Paris exhibition of 1867 he exhibited various colored photographs, which lasted about a week in subdued daylight.

Since Nièpce, who died in 1870, Poitevin and Zencker have given a process for obtaining colored pictures on paper. Paper saturated with common salt is sensitized by immersing it in a bath of nitrate of silver. It is then thoroughly washed and exposed to the light in a solution of sub-chloride of tin. By this means violet sub-chloride of silver is formed from the white chloride in the paper. At this stage the paper is but little sensitive to colored light; but if it be treated with a solution of chromate of potash and sulphate of copper, its sensitiveness increases considerably, so that transparent colored pictures can be copied by it. The colors are never as vivid as in the original, however, though they look tolerably well in a subdued light. No means has yet been found for fixing these prints. Hyposulphite of soda cannot be used, as in ordinary photographic work, for it destroys the colors at once.

Theories of the Earth.

The history of the formation and development of the earth has long been a favorite subject for study among scientific men, but thus far we have few very exact notions concerning the real process. Mr. R. S. Woodward delivered an address on the subject before the section of Mathematics and Astronomy at the recent meeting of the American Association for the Advancement of Science, at Toronto. "The earth," he says, "furnishes us with a most attractive store of real problems: its shape, its size, its mass, its precession and nutation, its internal heat, its earthquakes and volcanoes, and its origin and destiny, are to be classed with the leading questions for astronomical and mathematical research. We must of course recognize the claims of our friends the geologists to that indefinable something called the earth's crust, but, considered in its entirety and in its relations to similar bodies of the universe, the earth has long been the special province of astronomers and mathematicians. Since the times of Galileo and Kepler and Copernicus, it has supplied a perennial stimulus to observation and investigation, and it promises to tax the resources of the ablest observers and analysts for some centuries to come. The mere mention of the names of Newton, Bradley, d'Alembert, Laplace, Fourier, Gauss, and Bessel calls to mind not only a long list of inventions and discoveries, but the most important parts of mathematical literature. In its dynamical and physical aspects the earth was to them the principal object of research, and the thoroughness and completeness of their contributions toward an explanation of the 'system of the world' are still a source of wonder and admiration to all who take the trouble to examine their works. . . . As we look back through the light of modern analysis, it seems strange that the successors of Newton, who took up the problem of the shape of the earth, should have divided into hostile camps over the question whether our planet is elongated or flattened at the poles. They agreed in the opinion that the earth is a spheroid, but they debated, investigated, and observed for nearly half a century before deciding that the spheroid is oblate rather than oblong. This was a critical question, and its decision marks perhaps the most important epoch in the history of the figure of the earth. The Newtonian view of the oblate form found its ablest supporters in Huyghens, Maupertuis, and Clairaut, while the erroneous view was maintained with great vigor by the justly distinguished Cassinian school of astronomers. Unfortunately for the

Cassinians, defective measures of a meridional arc in France gave color to the false theory and furnished one of the most conspicuous instances of the deterring effect of an incorrect observation. The point was definitely settled by Maupertuis's measurement of the Lapland arc. For this achievement his name has become famous in literature as well as in science, for his friend Voltaire congratulated him on having 'flattened the poles and the Cassinis,' and Carlyle has honored him with the title of 'Earth-flattener.'

"Since the settlement of the question of the form, progress towards a knowledge of the size of the earth has been consistent and steady, until now it may be said that there are few objects with which we have to deal whose dimensions are so well known as the dimensions of the earth. But this is a popular statement, and like most such needs to be explained in order not to be misunderstood. Both the size and shape of the earth are defined by the lengths of its equatorial and polar axes; and knowing the fact of the oblate spheroidal form, the lengths of the axes may be found within narrow limits from simple measurements conducted on the surface, quite independently of any knowledge of the interior constitution of the earth." In the LOCOMOTIVE for May, 1889, an explanation is given of the principle upon which certain of these measurements are made.

In 1830, Sir George Airy published a memoir giving the polar and equatorial diameters of the earth, as calculated by him from all the measurements that had been made up to that time. In 1841, Bessel gave similar figures which agreed very closely with Airy's, and were for a long time believed to be almost exact. In 1866, Captain Clarke, R. E., published the results of his calculations, which included many excellent measurements made after Bessel's time. Clarke's figures are still used by the U. S. Coast Survey, and are so accurate that it is not likely that they will ever be changed by more than a few hundred feet. The spheroid thus measured is an ideal one, which fits the actual shape of the earth as nearly as any spheroid can; but it is a fact that irregular deviations from this shape can be detected, and have been detected. It is known, for example, that the Pacific Ocean, off the coast of Japan, bulges outward several hundred feet from the average surface represented by the Clarke spheroid; and similar irregularities in the ocean's surface have been detected elsewhere. However, we have as yet only the vaguest notions of the causes of such irregularities, and a most inadequate knowledge of their distribution and extent.

The notion that the earth was originally in a fluid condition has been held by mathematicians for a great many years. It appeared to be borne out by the fact that the temperature of the earth increases as we pass downward, but it is not now regarded as certainly established. It has been shown that the earth as a whole must be as rigid as a ball of glass of the same size, or the sun and moon would raise tides in it, as they do in the ocean. On the other hand, it appears that the pressure at the center of the earth must be something like *three million atmospheres.* What the melting point of rock may be at that pressure, we have no means of knowing; but it is practically certain that under such pressure of three million atmospheres, basalt and granite must flow as freely as water.

With regard to the cooling of the earth, Mr. Woodward cites Sir William Thomson's memoir on the secular cooling of the earth, in which he shows that if we assume the original temperature at which the earth was liquid to 7,000°, we may fairly conclude that the entire geological development of our planet has taken place in a length of time not less than 20,000,000 years, and not greater than 400,000,000 years. Sir William says: "We must allow very wide limits in such an estimate as I have attempted to make; but I think we may with much probability say that the consolidation cannot have taken place less than twenty million years ago, or we should have more underground heat than we actually have, nor more than four hundred million years ago, or we should not have so much."

Incorporated 1866.

HARTFORD STEAM BOILER INSPECTION AND INSURANCE CO. HARTFORD, CONN.

Charter Perpetual.

Issues Policies of Insurance after a Careful Inspection of the Boilers,

COVERING ALL LOSS OR DAMAGE TO

BOILERS, BUILDINGS, AND MACHINERY.

ALSO COVERING

LOSS OF LIFE AND ACCIDENT TO PERSONS

ARISING FROM

Steam Boiler Explosions.

Full information concerning the plan of the Company's operations can be obtained at the

COMPANY'S OFFICE, HARTFORD, CONN.,

Or at any Agency.

J. M. ALLEN, President. W. B. FRANKLIN, Vice-Prest.
J. B. PIERCE, Secretary. FRANCIS B. ALLEN, 2d Vice-Prest.
E. J. MURPHY, M. E., Consulting Engineer.

Board of Directors.

J. M. ALLEN, President.
FRANK W. CHENEY, Treas. Cheney Brothers Silk Manufacturing Co.
CHARLES M. BEACH, of Beach & Co.
DANIEL PHILLIPS, of Adams Express Co.
RICHARD W. H. JARVIS, Prest. Colt's Fire Arms Manufacturing Co.
THOMAS O. ENDERS, President of the U. S. Bank.
LEVERETT BRAINARD, of The Case, Lockwood & Brainard Co.
GEN. WM. B. FRANKLIN, U. S. Commissioner to the Paris Exposition.
NEWTON CASE, of The Case, Lockwood & Brainard Co.
NELSON HOLLISTER, of State Bank, Hartford.
HON. HENRY C. ROBINSON, Attorney at-Law, Hartford.
HON. FRANCIS B. COOLEY, of the National Exchange Bank, Hartford, Conn.
A. W. JILLSON, late Vice-Prest. Phœnix Fire Ins. Co., Hartford, Conn
EDMUND A. STEDMAN, Treasurer of the Fidelity Co., of Hartford, Conn.
CLAPP SPOONER, Bridgeport, Conn.
GEORGE BURNHAM, Baldwin Locomotive Works, Philadelphia.
HON NATHANIEL SHIPMAN, Judge United States Circuit Court.

A. S. Ferry, General Agent, Office at Hartford, Conn.

GENERAL AGENTS.	CHIEF INSPECTORS.	OFFICES.	
THEO. H. BABCOCK,	R. K. McMURRAY,	NEW YORK CITY.	Office, 285 Broadway.
CORBIN & GOODRICH,	WM. G. PIKE	PHILADELPHIA.	" 430 Walnut St.
LAWFORD & McKIM,	JOSEPH CRAGG,	BALTIMORE, Md.	" 22 So. Holliday St.
C. E. ROBERTS,	WM. U. FAIRBAIRN,	BOSTON, MASS	" 35 Pemberton Sq.
		PROVIDENCE, R. I.	" 29 Weybosset St.
H. D. P. BIGELOW,	H. D. P. BIGELOW,	CHICAGO, ILL.	" 112 Quincy St.
C. C. GARDINER,	J. S. WILSON,	ST. LOUIS, MO.	" 404 Market St.
L. B. PERKINS,	F. S. ALLEN,	HARTFORD.	" 218 Main St.
W. G. LINEBURGH & SON,	J. H. RANDALL,	BRIDGEPORT.	" 94 State St.
GEO. P. BURWELL,	C. A. BURWELL,	CLEVELAND.	" 208 Superior St.
MANN & WILSON,	J. B. WARNER,	SAN FRANCISCO.	" 306 Sansome St.
ZOLLARS & McGREW,	T. E. SHEARS,	DENVER, COL	" Opera House Block.
C. I. McCARY & CO.,	B. F. JOHNSON,	BIRMINGHAM, ALA.	" 2015 First Av.
W. S. HASTIE & SON,		CHARLESTON, S. C.	" 44 Broad St.

The Locomotive.

PUBLISHED BY THE HARTFORD STEAM BOILER INSPECTION AND INSURANCE COMPANY.

NEW SERIES—VOL. XI. HARTFORD, CONN., MARCH, 1890. No. 3.

On Boiler Trials.

Although most engineers understand the principles of boiler testing, we have thought that an outline of the methods most commonly used might be of service to such of our readers as have never conducted or been present at such trials. The apparatus that we show in the cuts is simple, and can readily be set up and arranged by any engineer; yet we believe it to be capable of giving very satisfactory results.

The first thing to do, in making the trial, is to set up the pump, *C* (Fig. 1), and the cask, *A*, and scales, *B*. In case the boiler to be tested (*D*) is one of a battery, its feed pipe, *E*, may be disconnected from the main feed, F, the opening thus left in the tee on *F* being closed by a screw plug. The boiler feed is then connected to the pump by means of suitable pipes, reducing coupling being used if necessary. The suc-

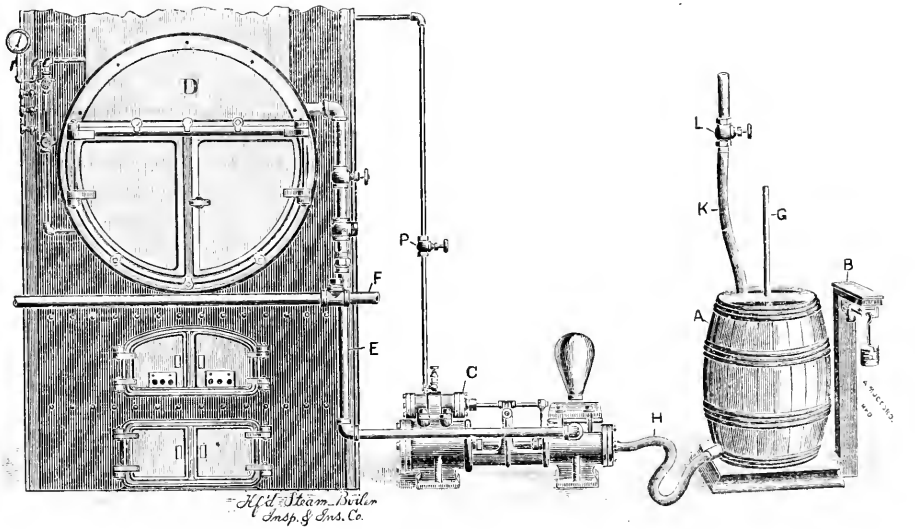

FIG. 1.—APPARATUS FOR EVAPORATIVE TEST.

tion of the pump is connected to the cask, *A*, by means of a rubber hose, *H*, and the cask is filled by means of another piece of hose, shown at *K*. The connection at E should be left until the last thing, or otherwise the water in the boiler may run low while the pump and cask are being arranged, and serious damage may result.

When all is in readiness, a small quantity of water is let into the cask, and the pump is started so as to fill the connecting pipes and enable the engineer to detect and stop any leakage there may be. The fire is then hauled, and the water level marked. The mark should be a little above the second try-cock, this being the general level

carried by engineers. A new fire is next built on the grates, using kindling material that has been previously weighed.

Meanwhile water is introduced into the cask until the cask and its contents weigh (say) six hundred pounds. When it becomes necessary to feed, the temperature of the water in *A* is taken by stirring a thermometer around in it, and the valve *P* is opened and the pump allowed to work until the cask and its contents weigh exactly one hundred pounds. We know, then, that five hundred pounds of water have been introduced into the boiler. This fact, together with the time of day, is taken down in a note-book, and the cask is filled once more, ready for the next feed.

In order to avoid errors in getting the weight of the feed water, it is well to proceed as follows: Place a float in the cask, with a rod or stick, *G*, projecting upward from it, and passing through a hole in a piece of board tacked to the top of the cask. Place the sliding weight of the scales at the zero mark, and at the end of the beam hang, say, two two-hundred pound weights, and two one-hundred pound ones. Then open the valve *L* and let the water enter the cask until the scales just balance. If a slight excess of water is introduced, it may be baled out, so as to make the balance exact. Then make a mark on the float-stick, *G*, opposite the top of the board through which it passes. Then take off all the weights at the end of the beam, except one of the one-hundred pound ones, and pump down till the scales just balance. Then make another mark on *G*, opposite the top of the board on the cask. After this has been done, the procedure is very simple. To fill the cask, add the weights that have just been removed, and open the valve *L* wide until the high water mark on *G* gets near the top of the board. Then shut it almost off and let the cask fill slowly until the scales just balance. A little practice will enable the engineer to shut off the water so exactly that the beam of the scales will come to rest half way between the stops; but should too much water be accidentally admitted, the sliding weight on the beam is run out till the balance is restored, and the correct weight of the water is jotted down in the note-book. The sliding weight is then pushed back, and all weights except the hundred-pound one are removed from the beam. When the water is fed the valve *P* may be opened up till the low-water mark on *G* approaches the board, the pump being then run slowly until the balance is obtained. If *P* is not closed quickly enough, so that a little too much water is removed from the cask, the hundred-pound weight on the beam is removed and the true weight of the cask and contents ascertained by means of the sliding weight. By conducting the feeding operations in this manner the engineer may obtain very accurate results, without much trouble.

As the trial draws to a close, care should be taken that the water level in the boiler is a trifle below the string on the gauge-glass, which marks the level of the water when the test began. Then, when the trial is at an end and the fires have been drawn, water is introduced by the pump until the level is brought back to the string, and the weight of the water so introduced is recorded in the note-book. It will then be an easy thing for the engineer to find out, at his leisure, precisely how much water he has fed during the entire trial.

Now as to the fires. When the grates and ash-pit have been carefully cleaned, and the new fire has been started, with a known weight of kindling material, a careful record should be kept of the weight of coal used, and the condition of the coal should be the same as it is under ordinary circumstances, in the every-day practice. Many engineers, in making such trials, dry out a sample of the coal to find out what proportion of it is moisture, and allow for this moisture in the total weight of coal used. This does not seem to us a desirable thing to do, since the object of most tests is to find out, not what the boiler *can* do under assumed conditions, but what it *does* do under actual conditions. The same rule applies to the handling of the fire. We hold that if the

trial is intended to show what the boiler is doing in its every-day work, no attempt at expert firing should be made while the trial is in progress, but everything should be done as on ordinary days.

No water should be used in the ash-pit, and as the end of the test draws near it is a good plan to let the coal on the grate burn pretty well out. At the last moment the fire is hauled and deposited in the ash-pit, together with the ashes already there, and allowed to cool, when the coal may be separated from the ash and clinker by hand, if desired. Both are then weighed, and the sum of the two is taken from the total weight of coal fed into the furnace. This gives the quantity of *combustible* used. If the coal found in the ash-pit be subtracted from the total amount of coal used, the result is the total amount of *coal* used. If the weight of ash be divided by the weight of coal used, the result is the per cent. of ash the coal contains.

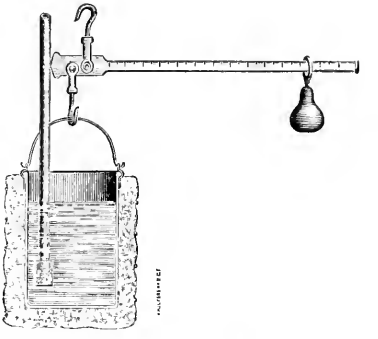

FIG. 2. — CALORIMETER.

If the steam that boilers give off was perfectly dry, the weight of water fed would be equal to the weight of steam formed; but since steam ordinarily contains a certain percentage of water, existing in it in the form of fine spray, or mist, we have to take this fact into account in estimating the quantity of water evaporated. The apparatus for determining the moisture present in steam is shown in Fig. 2. It consists of a common steelyards and a large tin pail, about which a layer of cotton wool, an inch and a half or two inches thick, is wound, and secured by means of an outer layer of cloth, around which several turns of string are tightly wound. The empty pail is made to weigh some exact number of pounds by placing one or two nuts or other bits of iron in it. Ten pounds of water are next weighed into it, and the weight on the steelyards is then pushed along one pound. Steam is then blown into the pail until the steelyards once more balance. In this way we know, with considerable precision, just when one pound of steam has been added to the water. The temperature of the water in the pail is taken both immediately before and immediately after the steam has been passed into it, care being taken, especially in measuring the higher temperature, to stir the water well with the thermometer, and to leave the thermometer in it long enough for the quicksilver to reach the same temperature as the water in which it is plunged. The rise in temperature so obtained gives us a means of determining the percentage of moisture in the steam, and numerous rules and formulæ for calculating it will be found in the books.

We think, however, that most engineers will find the following table very satisfactory. (The first table of this sort, we believe, was given about 1867 by Dr. Van der Weyde. It has since been republished by Mr. Thomas Pray and others.)

This table is exact when the steam pressure is 75 lbs. and the temperature of the water in the pail, before drawing steam into it, is 60°. It will still be serviceable, however, for pressures and temperatures differing considerably from these. If the rise in temperature is greater than 105°, the steam is superheated.

It will be seen that the thermometer used in this work must be of very good quality, in order to give readings of sufficient accuracy to determine the moisture satisfactorily. It should be graduated to single degrees, and the readings, both before and after drawing the steam, must be taken with great care. The experiment should be repeated frequently during the trial, and the average rise in temperature is to be taken in calculating the moisture from the table given above.

TABLE FOR FINDING THE PERCENTAGE OF MOISTURE IN STEAM.

Rise in Temperature.	Per Cent. of Water.	Rise in Temperature.	Per Cent. of Water.	Rise in Temperature.	Per Cent. of Water.
105°	0	95°	12	77°	34
104	1	93	14	76	36
103	2	92	16	74	38
102	3	90	18	72	40
101½	4	88½	20	71	42
101	5	87	22	69	44
100	6	85	24	67	46
99	7	83	26	66	48
98	8	81	28	64	50
97	9	80	30	62½	52
96½	10	79	32	61	54

Particular attention should be paid, in making boiler trials, to two points. In the first place, the blow-off valve must be perfectly tight. Otherwise a considerable amount of water will pass off through it, and the boiler will appear to be doing better than it really is. Secondly, in drawing steam from the main pipe for use in the calorimeter, care must be taken to let it blow freely through the pipe running to the pail, until this pipe and its connections are well heated; otherwise the steam will appear wetter than it really is. The lower end of this pipe should be fitted with a rose, or at all events with a tee, so that the incoming steam may not blow directly against the bottom of the pail. If this is not attended to, the engineer will find it impossible to tell when he has drawn off precisely one pound of steam. Attention should be paid, also, to the manner in which this pipe enters the main. More or less moisture is always drawn along the interior surface of steam pipes by the steam, so that if the pipe barely enters the main, the steam drawn off through it will be too wet, and will not fairly represent the average quality of that which the boiler is making. Various ways of connecting the pipe have been proposed, in order to secure steam that will be of average quality. We think that the engineer will achieve this by putting a longer thread than ordinary on the end of the pipe, and screwing it in until its inner end projects somewhat into the interior of the main.

The percentage of moisture in the steam being known, the quantity of water that went over into the mains *as* water is easily found. Thus, if the total water apparently evaporated was 15,000 lbs., and there was 5 per cent. of moisture in the steam, the total amount that went over unevaporated would be $15,000 \times .05 = 750$ lbs. This being subtracted from the weight of water fed, we have $15,000 - 750 = 14,250$ lbs. as the quantity of water actually evaporated. If this be divided by the total weight of coal burned (say 1,750 lbs.), the evaporation per pound of coal is $14,250 \div 1,750 = 8.14$ lbs. In the next issue of THE LOCOMOTIVE the various calculations for reducing the observed evaporation to the equivalent evaporation from and at 212°, etc., will be explained.

In closing this article it may be well to say, that accurate results cannot be obtained in boiler trials without a good deal of work, and the exercise of patience and care. Various measurements other than those herein described are usually made at the same time, as, for instance, the temperature of the flue, the draft of the chimney, the flow of air into the ash-pit, and particularly the steam pressure. See the article in this issue on the tests made by this company at Ware, Mass.

Inspectors' Reports.

JANUARY, 1890.

During this month our inspectors made 5,119 inspection trips, visited 10,693 boilers, inspected 3,907 both internally and externally, and subjected 506 to hydrostatic pressure. The whole number of defects reported reached 8,622, of which 752 were considered dangerous; 49 boilers were regarded unsafe for further use. Our usual summary is given below:

Nature of Defects.	Whole Number.	Dangerous
Cases of deposit of sediment,	453	24
Cases of incrustation and scale,	828	25
Cases of internal grooving,	73	12
Cases of internal corrosion,	280	28
Cases of external corrosion,	620	42
Broken and loose braces and stays,	119	40
Settings defective,	221	28
Furnaces out of shape,	266	15
Fractured plates,	148	62
Burned plates,	135	43
Blistered plates,	220	16
Cases of defective riveting,	2,324	87
Defective heads,	91	28
Serious leakage around tube ends,	1,599	136
Serious leakage at seams,	373	32
Defective water-gauges,	246	26
Defective blow-offs,	84	19
Cases of deficiency of water,	17	10
Safety-valves overloaded,	38	20
Safety-valves defective in construction,	70	17
Pressure gauges defective,	257	28
Boilers without pressure gauges,	10	10
Unclassified defects,	140	4
Total,	8,622	752

The number of boilers without pressure gauges is unusually great this month. The excuse is sometimes given that when the pressure never exceeds a few pounds, and a safety-valve and automatic damper regulator are provided, a gauge is not necessary. We hold, however, that the gauge is essential to safety under all circumstances, and the vast majority of the owners of such boilers are with us. It is only occasionally that we find them without.

Boiler Explosions.

JANUARY, 1890.

SAW-MILL (1). A frightful boiler explosion occurred in a saw-mill on Grand River, near Chillicothe, Mo., on January 2d. Two men, — William Hughes and John Runkle — employees of the mill, were instantly killed.

HEATING BOILER (2). On January 3d, a small heating boiler exploded in a residence in Cincinnati, O., doing considerable damage to the house, but injuring no one.

LOCOMOTIVE (3). The boiler of engine No. 422 on the Baltimore & Ohio Railroad, exploded at Benwood Junction, near Wheeling, W. Va., on January 4th, making a total wreck. The engineer, Cunningham, was blown two hundred yards and escaped with slight injury. The fireman, Goehing, was badly hurt about the face and head. Track foreman Boyd was struck in the leg by a flying piece of iron. The Western Union telegraph wires were nearly all broken at the scene of the explosion, the platform and a freight car were badly damaged, and nothing was left of the locomotive save the driving wheels, truck, frame, and a few pieces of tangled and twisted rods and tubes.

COLLIERY (4). One of a nest of boilers in the Schooley Colliery, at Strumersville, Pa., exploded on January 4th, at an early hour. Much damage was done to the surrounding property, and the engineer was badly scalded.

SAW-MILL (5). The boiler in Richard W. Douglass's steam saw-mill at Crockett, Tex., exploded on January 7th. Little damage was done, but the proprietor's son was badly scalded.

SAW-MILL (6). A boiler explosion at Knox's saw-mill, near Eldorado, Pa., on January 8th, caused considerable commotion at the time. The boiler was of 30-horse-power and weighed 8,000 pounds. It was blown to pieces and strewn over the ground. J. W. Yohn, the engineer, was cut and scalded about the head, face, and shoulders.

QUARRY (7). A stationary engine used by Burke Brothers in running the steam drills in their quarry near Greenville, Pa., exploded its boiler with terrific force on January 8th, causing the death of the engineer, an Italian, the fatal injury of a Hungarian, and severe injury to several other workmen. The engineer was struck on the neck by a flying piece of the boiler, and his head was completely severed from the body. The boiler had been in use in the quarry for a number of years and is believed to have become defective from continual exposure to the weather.

LOCOMOTIVE (8). On the afternoon of January 9th, the boiler of engine No. 159 of the West Shore Railroad burst in the yards at Kingston, N. Y. Oscar M. Gray, G. T. Smith, and W. C. Mansfield were scalded, but no one was killed.

FOUNDRY (9). On January 10th the boiler in the Cuero Brass and Iron foundry, Cuero, Tex., owned and operated by John Lewis, exploded, killing David Brown and Henry Dean, and seriously injuring Perry Ward, all of whom were in the building at work. Mr. Lewis's residence, to the rear of the foundry, was badly shattered and his wife and one child injured. Dean was blown across the street a distance of 100 feet. The boiler was carried up and through the building, falling over 100 yards distant.

PRINTING OFFICE (10). Five hundred girls and men employed by the John Morris Stationery and Printing Company, Chicago, had a narrow escape from death on January 10th. A boiler in the basement exploded, smashing the big plate-glass windows throughout the building and doing much other damage. Pedestrians in the street were thrown prostrate and the neighborhood was showered with flying glass. Five men were fatally injured, and seven other persons were severely hurt. The loss, it is said, will amount to $20,000.

SAW-MILL (11). A saw-mill boiler exploded at Bell's Ferry, N. C., on January 10th, killing one man and seriously injuring three or four others.

PUBLIC SCHOOL (12). A heating boiler exploded on January 13th, in a public school building at Laurel, Del. The school was in session at the time, and the scholars were panic-stricken, but no one was seriously injured.

STEAM SHOVEL (13). On January 15th the boiler of the steam shovel used by the Pittsburgh & Lake Erie Railway Company in excavating at Fallston, Penn., exploded with such force that several pieces were blown across the river and driven into the ground a quarter of a mile away. Besides the regular force employed in running the machine, a number of Italians and the conductor and engineer of train No. 1 were sitting in a tool-car back of the shovel. All were more or less hurt. Wesley Francis, of Mt. Washington, repairer of boilers and engines, who had just arrived, had both legs broken and was badly mangled. He died on the way to the hospital. The injured were: James Hooper, fireman, Martin Dickey, Patrick Sullivan, William Mock, William Rice, William Griffin, John Anderson, William Morgan, James Furnnier, and William Stewart; also the conductor of the gravel train, and two Italians whose names are unknown. The boiler seemed to be in good condition, and the gauge indicated forty

pounds of steam. The cause of the explosion has not been determined, but the machinery had been in use for many years. The tool car caught fire, and two barrels of oil stowed therein fed the flames. All the windows in houses near by were broken, and the shovel was demolished.

Soda Water Manufactory (14). A boiler exploded at Denver, Col., on January 15th, in a soda water manufacturing establishment. Nobody was injured, but considerable damage was done.

Tin Plate Works (15). On January 18th, a head blew out of one of the boilers at the works of the United States Iron and Tin Plate Company, at McKeesport, Pa. Fortunately no one was hurt, and the damage was not great.

Freight House (16). A fatal boiler explosion occurred in Chicago, at the Wisconsin Central freight house, on Fifth avenue and Polk street, on January 18th. George W. Wiley, the night watchman, was instantly killed. The explosion occurred in the night; otherwise the loss of life might have been great.

Pumping Station (17). One of the boilers at the pumping station of the Chartiers Oil Company, near Washington, Pa., exploded on January 20th. The loss was slight.

Pipe Line (18). A 40-horse power boiler at the Western & Atlantic pipe line station on the Burns farm near Murdochsville, Pa., exploded January 22d, wrecking the boiler house and a dwelling near by. J. T. Braden, an employee, Engineer Curtis, and Mrs. Burns and her daughter, aged 22 years, were terribly scalded. Mrs. Burns will probably die from her injuries, and Braden will lose his eyesight.

Colliery (19). Two large boilers in the fan house of the Mount Jessup Coal Company, a few miles north of Scranton, Pa., exploded with terrific force shortly after twelve o'clock on the morning of January 22d, and shattered the frame building in which they were situated. M. J. Munley and John Fatzan were in the building. Munley was found shortly afterward on the bank, about fifty feet distant, fatally scalded about the head and body. Fatzan, who is a Hungarian, could not be found for some time after the accident, and then it was ascertained that he had got out of the wreck and run home, although terribly maimed and scalded. His injuries, also, are said to be fatal. The wrecked building caught fire and was consumed. A large piece of one of the exploded boilers was flung a distance of 250 feet.

Flouring Mills (20). The boiler in the flouring mills at Hallowell, near Columbus, Kan., exploded on January 21st, mortally wounding Albert Earls, the proprietor, and Waybury, the engineer. Newberry, the fireman, was badly hurt. The mill was demolished.

Locomotive (21). The boiler of the locomotive pulling Louisville & Nashville freight train No. 64, blew up on January 23d, just beyond Baker's Station, near Nashville, Tenn., while the train was on a trestle. Engineer John Clark was badly scalded about the face and neck. George Blackwell, a brakeman, saw the cloud of steam escaping from the rear end of the boiler and jumped from the top of a box car to the ground, thirty feet. He was picked up with three ribs broken. Both men were taken to their homes. They suffered intensely, and Blackwell's injuries may prove fatal.

Saw-Mill (22). By a boiler explosion at a saw-mill on Falling Rock Creek, near Charleston, W. Va., on January 28th, three men lost their lives. Joe Wright and Morgan Hoover were instantly killed. Bud Mullin was fatally injured, and lived only a few hours.

Saw-Mill (23). B. F. Atkins and Frank Filey were killed by the explosion of the boiler at the Jolly & Filey mills, two miles east of Beebe, Ark., on January 28th. Atkins was head sawyer, and Filey was one of the proprietors. Atkins' body was blown 100 yards from the engine. No one else was hurt.

The Locomotive.

HARTFORD, MARCH 15, 1890.

J. M. ALLEN, *Editor.* A. D. RISTEEN, *Associate Editor.*

THE LOCOMOTIVE *can be obtained free by calling at any of the company's agencies.*
Subscription price 50 *cents per year when mailed from this office.*
Bound volumes one dollar each.

Papers that borrow cuts from us will do us a favor if they will plainly mark them in returning, so that we may give proper credit on our books.

GUSTAVE-ADOLPHE HIRN, the distinguished engineer and experimenter, died at Colmar, in Alsatia, on January 14th, aged 74 years and 5 months. The labors and researches of this illustrious man, particularly in connection with the mechanical equivalent of heat, are too well known to need mentioning by us, and his death will be lamented by a large circle of friends and professional associates.

PROFESSOR R. H. Thurston's literary activity is surprising. We have just received from Messrs. John Wiley & Sons, 15 Astor Place, New York, a copy of his latest work, entitled *A Handbook of Engine and Boiler Trials.* It is an interesting volume of 514 pages, and contains a large amount of useful information concerning boiler trials, indicator work, and the Prony brake, and describes the methods used in both boiler and engine trials very fully. At the end over forty pages of tables are appended.

WE have received from the publishers, Messrs. Munn & Co., 361 Broadway, New York, a copy of *Experimental Science*, a book of 719 pages, illustrated by more than six hundred and eighty engravings. The author is Mr. George M. Hopkins, who is probably well known to most of our readers on account of the articles by him published from time to time in the *Scientific American.* It is a treat to read a book of this kind, that sets forth the principles of physics so fully, and without the use of mathematics. All the apparatus is described in detail, and the explanations are given in full; so that the book will be of great use to the teacher, the student, and the amateur experimenter. Particular attention is given to electricity, and directions are given for measuring resistances, currents, and other electrical quantities. Secondary batteries, dynamos, and electric lighting systems come in for a good share of attention, and the chapter on "Mechanical Operations" contains a deal of useful information and many hints of a practical nature that would be very serviceable to anyone.

IN Mr. A. DeBary's recent work on the *Morphology and Biology of the Fungi Mycetozoa and Bacteria*, p. 474, we read that "the forms of Thallophytes included under the name of Arthrosporous Schizomycetes show an unmistakably close affinity with the chlorophyllaceous and phycochromaceous algae, which form the group of Nostocaceae in the wider use of the term as including the Nostocaceae and Chroococcaceae. This has been generally allowed since Cohn drew attention to the point in 1853, and has been recently and very fully worked out by Zopf."

That is precisely the attitude we have taken in regard to this matter, from the very outset; and it is gratifying to find that Mr. DeBary is at length coming around to our view of the case. Any view of it, other than the one above stated, is quite inconsistent with the facts, and altogether absurd.

Giuseppe Constantino Beltrami, and the Mississippi River.

The glory of many discoveries made in the past by Italians has been appropriated by foreigners. The nation was then weak and divided at home and despised abroad. Italians were calumniated by those who should first have guarded their interests, and their inventions and discoveries became the prey of whoever knew their language. It is owing in part to the disordered state of Italy in 1821 and the succeeding years, that the claims of Constantino Beltrami to be the discoverer of the sources of the Mississippi River are so little known even in his native country. He was a native of Bergamo, a judge of the royal courts at Macerata, who, taking part in the revolution of 1821, was exiled from Italy. With a heart bleeding for the wounds of his country and for his own he wandered through many parts of Europe and finally crossed the Atlantic, landing at Philadelphia in 1823. He visited Washington and other cities and then went down the Ohio river with the intention of going to Mexico. But at the junction of the Ohio with the Mississippi he found the country inundated and no steamboat descending the river, while there was one ascending it. His plans were altered, and on the 21st of April, 1823, he began that wonderful journey which resulted in the discovery of the northern sources of the Mississippi River, and the suggestion — a few years afterward verified by Schoolcraft — of the western sources.

Neither General William Clark and Merriweather Lewis, who in 1804–1805 crossed the Continent in an exploring expedition organized by President Jefferson; nor Pike, who in 1805, in an expedition made to discover the sources of the "Father of Waters," fixed them at Lake Leech; nor Governor Cass, of Michigan, who in 1820 reached the lake which now bears his name; nor Major Long, who, on the same expedition of which Beltrami was a member, turned off to the right, reached the northern lakes and the "Height of Land" which Beltrami, unaided and alone, discovered. Schoolcraft and all the other travelers and discoverers up to Captain Glazier, in 1881, followed him, amplifying and making more precise his report, but not altering the fact that Beltrami was the first white man to tread those marshy shores, called by the Indians "the Shaking Land"; to go through the vast forest; to drag his light canoe up the swift rapids of the rivers, or to look upon the broad expanse of the lake which he named Julia, after an Italian countess.

In that eventful summer excursion he was in company, from the mouth of the Ohio to the junction of the Minnesota and the Mississippi, with Clark and Lewis, who left the *Virginia*, the first steamboat that had ever penetrated these northern waters, at the then farthest limit of American colonization — Fort Saint Peter. He made friends with the Indians gathered at the fort to trade, and was amused at the veneration they expressed for the vessel which, without sails, masts, or oars, made way against the current, pouring forth smoke and sparks of fire. They thought it must be the home of the Great Spirit. He accompanied them in excursions around Fort St. Peter, visiting St. Anthony's falls, eight miles distant, and was enchanted by the majesty and beauty of that cataract. This spectacle of nature increased his desire to proceed up the river, and if possible, arrive at the yet undiscovered sources. Fortunately, while he was waiting undecided at the fort, a numerous party arrived, commanded by Major Long, and sent out for that very purpose by the United States Government. Beltrami joined this company, although reluctantly permitted to do so by Major Long, who, although he had accepted an astronomer, a botanist, a mineralogist, a zoölogist, and an artist, could not perceive the utility of adding an Italian, and told Beltrami that the mere pleasure of satisfying his curiosity would not repay him for the heavy expenses that he would incur on the journey. The expedition set out on July 7th, and was divided into two parts; one having twenty-two mules and horses, went by land along the shores, and the other in five canoes on the river. Beltrami went with the canoe party, and was charmed with the beauty of

the shores, the immense forests, the lovely hills, the groups of lakes seen in the distance, upon which floated swans and other aquatic birds.

These were wilds almost uninhabited; the few Sioux and Chippewa Indians who had left their cabins there deserted, having gone away to seek food or to pursue the chase. After a month of this life Major Long with his companions turned off to the right near Lake Winiboshish, according to his previous instructions, and returned by the great lakes to Philadelphia. Beltrami was left alone, but more determined than ever to discover the sources of the Mississippi; and this he did, crowning the official expedition of the United States with one of the boldest and most important discoveries ever made in the history of geographical research. Difficulty and danger surrounded him when he ventured into the unknown region. Not even the Indians knew the course of those numerous interlacing rivers or the position of the lakes, except in their own vicinity. He secured the company of two bloodthirsty Chippewas, who, to revenge some wrong, were going up the river, and of a half-blood as interpreter. The journey through these inhospitable lands, where the Indians were enemies to the white man and the wolves howled nightly around his tent, was made chiefly on foot, as the dogs furnished by the half-blood interpreter, after three days' journey through the forests and marshes, were worn out and the only mule carried the baggage. But Beltrami was a good hunter and won the admiration of his wild companions by shooting birds for their eating as well as killing with his club a young bear. Yet he was forced to yield to the caprices of these savages, as at the slightest provocation they threatened to abandon him. He supplied them amply with food, halted when they pleased, and even waited while they made offerings to a pole smeared with red — a kind of Manitou or Great Spirit of the waters. But all his efforts and concessions failed to overcome their fears of the Sioux, with five or six of whom one day they had a conflict.

After several days' ascent of the rapids, when he was often obliged to jump out on the sharp rocks to save his canoe, he was lying worn-out under a tree when he heard the report of firearms and ran forward to aid his Chippewas, one of whom was wounded. The Sioux ran away at the mere sight of the white man, whom they believed to be in company with the large party of Major Long. The Chippewas soon after deserted him; the interpreter having left before, and he was left entirely alone — a new Robinson Crusoe without even a man Friday. But the way was marked for him by the course of the river and he would now have sacrificed life itself rather than abandon his project. He had arms and ammunition for his needs and a few gifts for hostile savages if he should meet any. Inexpert with the oar, his canoe sometimes upset and then he from the shore dragged it up the current and the rapids and over the rocks by a rope tied to his own waist. He killed a wolf which attacked his store of provisions in the night; and frightened some Indians going down stream in two canoes by his red umbrella which he had raised like a tent to defend him during a storm. Pressing onward with indomitable courage, he at last found an encampment of fourteen Indians, nineteen dogs, and one wolf, the last of which company tore his only remaining pair of trousers. Here he found also another half-blood, whom he persuaded to accompany him.

These dangers and fatigues were crowned with complete success on the morning of the 28th of July, when Beltrami found the elevated plain now known as the most extended water-shed on the globe, and called in all the recent maps "The Height of Lands." From this natural observatory he saw before him a lake not more than three miles in circumference, but very deep, and below to the south other lakes. "These are the sources of the Mississippi," exclaimed Beltrami, convinced of the fact, yet surprised to find them not in great mountains but in an extended plain and a marshy country. He named the lake Julia, and the river leading to Turtle lake also Julia, after an hon-

ored lady in Italy, "whose life was an uninterrupted series of good deeds and whose death was a calamity for all those who had the fortune to know her."

The biographer of Beltrami, Count Pietro Moroni, who, in 1856, read a paper on this subject before the Literary Society of Bergamo, says: "Perhaps at this ceremony the spirits of Marco Polo, of Columbus, of Vespucci, of Cabot, assisted, happy to see their own ancient glories renewed in the discovery made by another Italian." If the river between Lake Julia and Lake Tartaruga had not been impracticable on account of the thick vegetation, Beltrami would have descended in his canoe, but did not regret being obliged to walk along the bank, persuaded as he was that he was the first white man who had ever trodden that vast solitude. Lake Turtle or Tartaruga, he said, is "like a labyrinth, as the straits and bays formed by many small islands and peninsulas render it almost inextricable." From the northern point where the river Julia enters it, he rowed about in his canoe until he found the outlet where the Mississippi begins, and continuing down the river a short distance came out into a beautiful small lake, which he named Geronima. Eight miles further on he found another lake which he called Monteleone, in memory of his friend Duke Monteleone, whom he had known in Florence in 1812. Then leaving the great river he followed one of its tributaries which led him to another lake, which he called Torrigiani, and then landing, and going through a dense forest, he found lake Antonelli, by the narrow outlet of which he re-entered lake Tartaruga. The knowledge of these lakes, which were previously unexplored, is due entirely to the courage, perseverance, and intelligence of this Italian traveler. He then re-descended the Mississippi, discovering further down in its course four other small lakes which he called "Laghi della Providenza," from the great quantity of wild rice growing upon the shores.

The emissary of the most southern of these lakes led him into Lake Cass and completed the series of his discoveries. But he at this time recognized the fact that there must be other sources at the west, as some Indians whom he found living upon an island in Lake Cass showed him the mouth of a river which they said led to a lake twenty miles west, and that lake communicated with other rivers. So that Beltrami said: "The western sources are, I conceive, fifty miles distant." This assertion shows a sagacity equal to his courage, and proves his claim to the discovery of the sources of the Mississippi. His great object accomplished, Beltrami turned his face towards the civilized world. He presented a canoe to the half-blood who had accompanied him down from the northern lakes and let him return. He was forced to take part in a battle between Indians; saved the life of the chief, and was accompanied by him and Voascita—a second Pocahontas — down the river.

He smoked the pipe of peace with the Indians along the way, raising his red umbrella as a further token of his peaceful intentions, and excited their wonder, contempt, and compassion by washing his face every day; sentiments which he returned when he saw them painting their faces black, red, white, and yellow. He exclaims, "What wonderful and delightful scenery! The greatness and beauty of this river excite and thrill my heart." Nature itself seems pleased with this beauty and proud of her own work as Michael Angelo in contemplating his picture of the "Last Judgment," exclaimed, "How beautiful it is!" Thus traveling in company with "His Majesty," Cloudy Weather, and Voascita, the daughter of that chief, Beltrami descended the stream and arrived near the last of September at the point of his departure from Major Long. He presented himself dressed in skins with moccasins on his feet and a birch-bark hat, surprising all the inhabitants of the fort, who thought him dead.

At New Orleans, in 1824, he published a book entitled "La découverte des sources du Mississippi." In 1828 he published in London two volumes, written in English, "Pilgrimage Leading to the Discovery of the Sources of the Mississippi." His discovery excited the wonder of the public, and he received great honors at New Orleans.

The London *Monthly Review* said: "The glory of having accomplished a work which various expeditions had failed to execute, though supported by unlimited funds and comprehending the labors of many, was won by the enterprise of an unpatronized individual." But this admiration declined, many doubting the reality of his journey, or accusing him of inventions and exaggerations; and although the expedition sent out by the United States in 1832 under Henry Schoolcraft splendidly confirmed Beltrami's principal discoveries, his fame was not restored, and his name was nearly forgotten. But, in 1863, Alfred Hill, of Minnesota, wrote to the Mayor of Bergarow for the details of Beltrami's life, as the "Historical Society of Minnesota wished to render justice to the first explorer of the Northwest of the American Union," adding: "I wish to do full justice to his claim as a discoverer, and to restore the names given by him to the various lakes he visited, before the advancing tide of settlement shall have caused others to be substituted." And in fact, the land around those lakes is now called Beltrami county. — *Madame Sophia Bompiani, in New York Observer.*

A Test of the Otis Company's Boilers.

Some time ago we were called upon to furnish designs for a steam plant for the Otis Company's Mills, at Ware, Mass., and we have recently had the pleasure of testing its every-day performance. The difficulties to be overcome in laying out this plant were very great; for, in the first place, the mills are so extensive and are spread over such an area that a very long line of main steam pipe was required, and the greatest care had to be exercised, not only to prevent loss from condensation, but to run the pipe in such a manner that it should not be crippled by its own expansion and contraction. Again, the arrangement of the buildings, and their position with respect to the railroad track (which was a considerable distance away) were such that it was difficult to find suitable places for the boiler-house and coal shed so that the boiler-house would be near the mills, and at the same time the coal shed be readily accessible by rail. After a careful survey of the premises, and a studious consideration of the conditions, it was thought best to build the boiler-house over the canal that supplies the water-wheels, and to locate the coal shed on the opposite of the Ware River (on the right bank of which the mills lie), communication between the two being established by means of a tramway running across the river on a trestle. A spur track from the railroad enters the shed at the top, and the coal is dumped from the cars directly into the pockets. The tramway from the boiler-house enters the shed at the bottom, and the tramcars are readily filled from the pockets overhead.

The boiler-house contains ten horizontal tubular boilers, with plain settings, eight of them being in use at the time of the test. They are divided into two batteries of five boilers each, by means of a passageway five feet wide. The chimney is located at the rear of the boiler-house, directly opposite the center of the building, the smoke-flue from each battery leading to a main flue which enters the chimney at the rear of the passageway separating the batteries. The draft of the boilers is controlled by a Locke regulator, which operates a damper placed in the main flue near the chimney. In addition to this, each boiler is provided with a hand damper in the uptake. These were found to be so well adjusted as to give a very equal draft at the ash-pit doors, the flow of air being taken with the anemometer, many trials of which were made at each furnace. As it was impracticable to weigh or accurately measure the feed water for all the boilers, it was decided to operate on boiler number three in battery number one, the preference being given to this one on account of the greater ease of making the necessary connections to it, and of handling the coal. The opening of the damper was marked at the outset, so that it might be adjusted to the same opening during the trial. Boilers numbers four and five of this battery were not in use.

The plant furnishes steam for six large Corliss engines, four of which are in constant use, also for several small engines operating hydro-extractors and special machines, for the dye-houses, the bleachery, the drying-machines, and the dry-rooms, and for heating the entire system of buildings and factories. The six large engines are condensing, and are remote from the boiler-house, so that no exhaust steam is utilized, nor is any water from the hot-wells used as feed supply to the boilers. The water supply for the boilers is furnished by two Knowles pumps, one driven by belt and one by steam. These take water from a receiving tank in which are collected the drips from the drying-machines, dry-rooms, and mill coils, and also the exhaust from three small engines and the steam pump, water from the canal being admitted through a regulator so as to maintain a constant level in the tank. This arrangement of the pumps was illustrated and explained in the LOCOMOTIVE for September, 1889.

Steam is taken from each boiler by a five-inch pipe leading to the twelve-inch steam main, which passes along the rear end of, and above, the boilers. From the east end of the boiler-house this main passes overhead, to and across one of the dye-houses, then dropping down to the basement and extending to the north end of the dye-house, and passing underground to No. 4 mill. From this main, steam is supplied for the engine that drives No. 4 mill, and for the dyeing, bleaching, and finishing departments, for the drying-machines and rooms, and for heating the buildings. This pipe, from the boiler-house to the engine, is 300 feet long. The steam for No. 2 mill engine is taken from the steam main in the center of the boiler-room, through a brick conduit to the basement of the mill, and through the basement to the engine-room.

From the west end of the boiler-room the steam main is carried across the end of the boiler-house, when it drops down underground and is carried through to the river wall, along which it runs for over one hundred feet. Thence it proceeds to No. 1 mill, supplying the engines in this mill, and passing on to the extreme west end of the basement, when it again goes underground and passes to the engine-room of No. 3 mill. This line of pipes, from the boiler-room to No. 3 engine, is seven hundred feet long.

Where the supply for No. 1 engine and the finishing-room engine and dye-house is taken off, the twelve-inch main is reduced in size to ten inches, the connections being eccentric so as to keep the bottom of the pipe on a true grade.

At each end the main connects to a vertical receiver, from which the steam for engine and mill use is taken. The receivers are dripped at the bottom, the water of condensation flowing through traps to the drip-pipe in the pump-room. When passing underground the pipe is either enclosed in thoroughly drained brick conduits, and well jacketed, or through boiler shells thirty inches in diameter and jacketed with mineral wool. Suitable wells and man-holes are located at joints, so that they may easily be gotten at. Wherever off-sets or angles allow, copper elbows and S's of long radius are used to provide for expansion. In long runs of straight pipe slip expansion joints are used. The pipe is securely anchored at proper points between the expansion joints, and it is supported by traveling hangers so that it may maintain a uniform grade in expanding.

An important factor to be determined in the trial was the loss of pressure in the steam mains between the boiler-rooms and the terminals in the engine-rooms. The gauge in No. 3 mill showed more than boiler-room pressure, and that in No. 4 mill showed less. This was found to be largely due to the connecting up of the gauges, that in No. 3 mill having its connections drop from above, giving a static pressure in the gauge-pipe, while that in No. 4 had its connections running down into the basement, so that the gauge was supporting a column of water. The loss in pressure was taken when the engines were running, and it was so slight that it was not thought necessary to take it when they were at rest. The gauges in the boiler-room were tested and the variation from the test-gauge noted. The test-gauge was then connected to the receivers in both

No. 3 and No. 4 engine-rooms, and an assistant in the boiler-room noted the pressures upon the gauges at the exact moments that readings were taken in the engine-rooms. The loss at No. 3 engine was one pound, and at No. 4 less than two pounds.

A calorimetric test of the steam was made by the method of drawing a quantity of steam into a known weight of water, the temperature of the water being also known. The increase in the weight of the water and the rise in its temperature, together with the reading of the steam gauge, gave sufficient data to calculate the wetness of the steam. Measurement taken in the boiler-room indicated that there was no free moisture in the steam at this point. Those taken at the receiver in No. 3 mill, at the end of the seven hundred feet of steam-pipe, showed five per cent. of moisture, this result being the mean of numerous trials, which agreed among themselves very well.

The average flow of air to ash-pits, obtained from many readings, was 490 feet per minute.

In making the evaporative test it was desired, most of all, to ascertain just what was accomplished in the daily practice, and no additional care was taken save in the weighing of the coal and water used. The coal was weighed as it was delivered to the tram car at the coal shed, and was subject to the same loss in transit and in handling as that which was supplied to all the other boilers in the room. Two of the car-loads used were practically dry coal, but a fresh cargo, received and unloaded during the trial, was very fine and wet, having in transportation been thoroughly saturated by a driving rain. As this coal was supplied to all the boilers in the room at the same time, it was decided not to dry out a sample to ascertain the per cent. by weight of moisture it contained. Had the coal been so dried the weight used would have been reduced to some extent. The coal used was two cars of George's Creek, and one car of Pocahontas.

The water delivered to the boilers was measured in the following manner: A large cask was placed upon a platform scale, the connection to the pump being made by means of a rubber hose. The scales were balanced, with the water just above the suction pipe leading to the pump, the cask was then filled, weighed, and pumped down to balance, this being repeated throughout the trial. Before drawing the fires the feed-pipe of No. 3 boiler was disconnected from the main feed and connected with the pump, and the pump was started so as to fill itself and the pipes, and to make sure that there was no leakage. The blow-off valve was examined and believed to be tight, as just outside the valve the pipe was cold.

When everything was ready for the trial the fires were quickly hauled and thrown into an adjoining furnace, the grates and ash-pits were quickly and thoroughly cleaned, and the height of the water in the gauge-glass was marked. Five cubic feet of pine wood were used in lighting the fire, this wood being allowed for and added to the gross weight of coal. The time that elapsed from the moment of commencing to draw the fire until the coal fire was burning brightly, was twenty-five minutes. The damper was readjusted to its former position, and at 3 o'clock P. M. the trial began. It was desired to bank the fires over night, there being some loss in so doing, and most of the boilers being so banked. This was done at the usual time, six o'clock, and at 6.30 in the morning they were unbanked and started up again, and the test continued until 5.30 P. M. The water was then brought up to the same level as at first, and the fires were drawn. No water was used in the ash-pit during the trial, so that the ash, clinkers, and unburnt fuel could be weighed dry.

During the trial the water was weighed accurately, and the temperature taken each time; the steam pressure was read every fifteen minutes, and the temperature of the room, of the flue, and of the outside air, once in thirty minutes. The draft at the chimney-gauge, and the flow of air into the ash-pit were also taken. The management of the fire was left entirely to the fireman on duty, and he paid no more attention to this boiler than to the others under his charge. In the following tables we give the results of the trial, and also the facts deduced therefrom by calculation:

Table I. Total Quantities.

1.	Duration of trial,	15 hours.
2.	Pine wood used,	5 cu. ft.
3.	Equivalent of wood (expressed in coal),	40 lbs.
4.	Weight of coal used (including wood),	7,152 "
5.	Weight of dry ash and clinker and unburnt coal,	557 "
6.	Weight of combustible matter,	6,595 "
7.	Per cent. of ash and clinker,	7.75
8.	Weight of water evaporated, from 43° and at 80.5 lbs.,	59,538 lbs.
9.	Weight of water evaporated, from and at 212°,	72,041 "

Table II. Quantities per Hour.

10.	Coal per hour,	476.66 lbs.
11.	Coal per hour per sq. ft. of grate area,	17.5 "
12.	Combustible per hour,	439.66 "
13.	Combustible per hour per sq. ft. of grate area,	15.98 "
14.	Water evaporated per hour, from 43°,	3,969.2 "
15.	Water evaporated per hour, from and at 212°,	4,802.6 "
16.	Water evaporated per hour per sq. ft. of heating surface, from 43°,	3.13 "
17.	Water evaporated per hour per sq. ft. of heating surface, from and at 212°,	3.79 "

Table III. Results.

18.	Water evaporated from 43°, per lb. of coal,	8.32 lbs.
19.	Water evaporated from and at 212°, per lb. of coal,	10.07 "
20.	Water evaporated from 43°, per lb. of combustible,	9.02 "
21.	Water evaporated from and at 212°, per lb. of combustible,	10.92 "

Table IV. Averages.

22.	Steam pressure by gauge,	80.5 lbs.
23.	Temperature of flue,	390°
24.	" feed water,	43°
25.	" boiler room,	67°
26.	" air outside,	42°
27.	Velocity of flow of air into furnaces, in feet per minute,	490.
28.	Draft, in inches of water,	0.75
29.	Total heating surface of boiler,	1,268 sq. ft.
30.	Ratio of heating to grate surface,	46 to 1

Table V. Boiler Horse-Powers Developed.

31.	Boiler horse-power, on a basis of 30 lbs. of water evaporated per hour, from 43°, and at 80.5 lbs. pressure,	132.9
32.	Boiler horse-power, on a basis of 30 lbs. of water evaporated per hour, from and at 212°,	160.

Commercial Value. — Centennial Rating.

33.	Boiler horse-power, on a basis of 30 lbs. of water evaporated per hour, from 100° and under a pressure of 70 lbs.,	139.2

An examination of these figures shows that the performance of these boilers is most remarkable, considering the fact that they were run in precisely the same manner as on other days. If care had been taken to dry out the coal before using it, and if expert firing had been resorted to, and attention paid to other points of this kind that are often looked after carefully in making such tests, the performance of the boilers would undoubtedly have risen to twelve pounds of water per hour, from and at 212°; but the instructions of the president of this company were that the test should be so made as to represent the actual, every-day performance of the plant; and it is believed that the figures above do represent this, fairly and honestly. There is one point, however, in which the every-day performance exceeds that indicated above. Owing to the return of the drips in the actual working of the plant the temperature of the feed is 150° instead of 43°, and the evaporation and efficiency is correspondingly greater.

Incorporated 1866.

Charter Perpetual.

Issues Policies of Insurance after a Careful Inspection of the Boilers,

COVERING ALL LOSS OR DAMAGE TO

BOILERS, BUILDINGS, AND MACHINERY.

ALSO COVERING

LOSS OF LIFE AND ACCIDENT TO PERSONS

ARISING FROM

Steam Boiler Explosions.

Full information concerning the plan of the Company's operations can be obtained at the

COMPANY'S OFFICE, HARTFORD, CONN.,

Or at any Agency.

J. M. ALLEN, President. W. B. FRANKLIN, Vice-Prest.
J. B. PIERCE, Secretary. FRANCIS B. ALLEN, 2d Vice-Prest.
E. J. MURPHY, M. E., Consulting Engineer.

Board of Directors.

J. M. ALLEN, President.
FRANK W. CHENEY, Treas. Cheney Brothers Silk Manufacturing Co.
CHARLES M. BEACH, of Beach & Co
DANIEL PHILLIPS, of Adams Express Co.
RICHARD W. H. JARVIS, Prest. Colt's Fire Arms Manufacturing Co.
THOMAS O. ENDERS, President of the U. S. Bank.
LEVERETT BRAINARD, of The Case, Lockwood & Brainard Co
GEN. WM. B. FRANKLIN, U. S. Commissioner to the Paris Exposition.
NEWTON CASE, of The Case, Lockwood & Brainard Co.
NELSON HOLLISTER, of State Bank, Hartford.
HON. HENRY C. ROBINSON, Attorney at-Law, Hartford.
HON. FRANCIS B. COOLEY, of the National Exchange Bank, Hartford, Conn.
A. W. JILLSON, late Vice-Prest. Phœnix Fire Ins. Co., Hartford, Conn
EDMUND A. STEDMAN, Treasurer of the Fidelity Co., of Hartford, Conn.
CLAPP SPOONER, Bridgeport, Conn.
GEORGE BURNHAM, Baldwin Locomotive Works, Philadelphia.
HON. NATHANIEL SHIPMAN, Judge United States Circuit Court.

A. S. Ferry, General Agent, Office at Hartford, Conn.

GENERAL AGENTS.	CHIEF INSPECTORS.	OFFICES.	
THEO. H. BABCOCK,	R. K. McMURRAY,	NEW YORK CITY.	Office, 285 Broadway.
CORBIN & GOODRICH,	WM. G. PIKE	PHILADELPHIA.	" 430 Walnut St.
LAWFORD & McKIM,	JOSEPH CRAGG,	BALTIMORE, Md.	" 22 So. Holliday St.
C. E. ROBERTS,	WM. U. FAIRBAIRN,	BOSTON, MASS	" 35 Pemberton Sq.
		PROVIDENCE, R. I.	" 29 Weybosset St.
H. D. P. BIGELOW,	H. D. P. BIGELOW,	CHICAGO, ILL.	" 112 Quincy St.
C. C. GARDINER,	J. S. WILSON,	ST LOUIS, MO.	" 404 Market St.
L. B. PERKINS,	F. S. ALLEN,	HARTFORD.	" 218 Main St.
W. G. LINEBURGH & SON,	J. H. RANDALL.	BRIDGEPORT.	" 94 State St.
GEO. P. BURWELL,	C. A. BURWELL,	CLEVELAND.	" 208 Superior St.
MANN & WILSON,	J. B. WARNER,	SAN FRANCISCO.	" 306 Sansome St.
ZOLLARS & McGREW,	T. E. SHEARS,	DENVER, COL	" Opera House Block.
C. J. McCARY & CO.,	B. F. JOHNSON,	BIRMINGHAM, ALA.	" 2015 First Av.
W. S. HASTIE & SON,		CHARLESTON, S. C.	" 44 Broad St.

The Locomotive.

PUBLISHED BY THE HARTFORD STEAM BOILER INSPECTION AND INSURANCE COMPANY.

NEW SERIES—VOL. XI. HARTFORD, CONN., APRIL, 1890. No. 4.

On the Corrosion of Gauge Glasses.

Every engineer knows that water-glasses corrode, and that they have to be replaced every little while. Sometimes they will last for six months, sometimes for a year or longer, and sometimes only for three months; but in any case it is only a question of time, and sooner or later they give out and have to be renewed. The cause of the corrosion has been studied by many, and several theories have been proposed to account for it. It is evident that there are three possible explanations; namely, (1) that the corrosion is of a purely mechanical nature, the glass being worn away by friction of some sort or another, or (2) that a chemical change goes on, the glass being gradually dissolved by the water in contact with it, or (3) that the two preceding causes work together.

In support of the first theory, it is urged that since the gauge-glass is much more exposed than the boiler, and is correspondingly cooler, the steam in the upper end must be continually condensing, the water so produced running down the sides of the glass

A CORRODED GAUGE GLASS.

and carrying with it small particles of iron rust and other solid matter, thus producing a grinding action similar to that of emery and water, only on a smaller scale. The fact that such condensation does take place continually may be readily seen by watching the glass for a time. Spirts of condensed water will often be seen coming down it, when it is connected directly to the boiler, and drops trickle constantly down the sides. Nor can there be any doubt that particles of solid matter are often carried along too, and deposited as mud in the bottom of the glass. The elements essential to the first theory do, therefore, really exist; but whether they are competent to explain the actual phenomena remains to be considered.

The second theory supposes that water will dissolve glass to some extent, which most of our readers will very likely be inclined to doubt. It is a fact, however, that water will dissolve glass in small quantities under certain conditions. The experiment has repeatedly been tried, of boiling a weighed amount of pulverized glass in water, and in every case it has been found that the glass loses weight by the operation. In fact, we have only to consider the composition of glass to see that this solubility is only what

might reasonably be expected. Glass is composed of silica (*i. e.*, sand), lime, and potash or soda. Lead oxide is also added to some varieties. Now, potash and soda are very readily soluble, particularly when the water is hot ; and it is not surprising, therefore, that a portion of these ingredients is dissolved out when the pulverized glass is boiled in water.

The question naturally arises, why is it necessary to pulverize the glass ? and why do not ordinary glasses, that are used daily for drinking and other purposes, show the same action ? In reply to these questions, we would call attention to the fact that iron may be protected from rust (or oxidation) by first giving it a thin coating of the black rust known to metallurgists and chemists as the magnetic oxide. This coating acts like a varnish, protecting the iron below it from the air. In a similar way the silica in the glass forms a covering that protects the glass below it from exposure to the water. The potash and soda are dissolved from the surface, the silica being left as a thin skin; and unless this skin is removed by some means, the dissolving action stops. When the glass is pulverized, the surface exposed to the water greatly exceeds that which is exposed when the glass is not pulverized, and a correspondingly greater amount of glass is dissolved before the skin of silica checks the action. Concerning the drinking vessels, it may be said that glass is almost insoluble in cold water, and that its solubility increases very rapidly with increased temperature. In fact, by enclosing equal volumes of glass and water in a strong vessel and exposing this to high heat, the water may be made to act on the glass so strongly as to decompose it entirely, leaving nothing in the vessel but crystals of a mineral known as wollastonite.*

Returning to a consideration of the actual conditions in a steam-boiler gauge-glass, it should be remarked that, in all probability, both of the actions above referred to take place at the same time. The temperature of the steam and water in a boiler carrying 75 pounds pressure is about 320° — more than a hundred degrees above the temperature of water boiling freely in the air. At this temperature the glass is far more soluble in water than at 212°, and we should naturally expect to find the corroding action proceeding with correspondingly greater rapidity. A highly important factor in dissolving glass seems to be the *purity of the water*. The condensed steam that runs down the inside of the glass is, in reality, distilled water ; and if there is no foaming or priming in the boiler, it must be in a state of perfect purity. It is, therefore, particularly active at the top of the glass, and rapidly lessens as we approach the water level, on account of the glass already taken up by the water of condensation in its passage over the surface above.

At the same time that the dissolving action is going on, there can be little doubt but that the mechanical scouring mentioned in the beginning of this article is also at work. Particles of iron rust and other solid matter, carried over bodily by the moisture in the steam, are thrown against the inner surface of the glass, and give rise to a scouring action that not only helps to wear away the glass by the direct friction it produces, but also removes the protecting skin of silica referred to in a previous paragraph, and exposes a fresh surface of unprotected glass to the solvent action of the water.

The third theory — that of the combined scouring and dissolving action — appears, therefore, to be the correct one ; it remains for us to consider the differences that exist in different waters, in the rapidity with which the corrosion progresses. It appears, in general, that the greatest rapidity is observed where the water is purest; and though exceptions to this rule may be occasionally noted, yet it is reasonable, we think, to believe that in such cases a simple cause for the exception exists, and, moreover, this cause may generally be found. For example, one boiler may be using impure water, and yet the water that distils over into the gauge-glass may be very pure, provided the boiler gives

* T. Sterry Hunt, *Chemical and Geological Essays.*

dry steam and does not prime or foam; while another boiler, using better water, may give wet steam, the moisture in which carries enough foreign matter along with it to materially lessen the capacity of the water in the gauge for dissolving glass. Another important consideration is this: if boiler compounds are used, the engineer may find it difficult to use precisely the amount required to keep his boiler clean, and a portion may be carried over into the glass by the particles of moisture the steam contains. This may cause the water that trickles down to be alkaline, and alkaline solutions, even when not very strong, possess the power of dissolving glass in a much greater degree than pure water does. This hastening action is apt to take place with the purer waters, because when using these the engineer is more likely to introduce an excess of the compound than he is when using water that is very hard. Account should also be taken in investigating anomalous cases of gauge-glass corrosion, of the exposure of the glass to cooling draughts of air; for it is evident that the more exposed the glass is the more rapid will be the condensation, and consequently the corrosion.

There can be no doubt but that water, at the instant it is condensed from steam, is particularly active in dissolving glass — much more active than after it has stood for a time. We have good evidence of this in our own experience. In fact, at the present moment the writer has before him a glass tube one-third of an inch in diameter internally and twenty-six inches long that was used by this company for condensing steam to supply the laboratory with distilled water. Although it was used only three hours, it is very perceptibly corroded by the hot water of condensation.

Gauge-glass corrosion is observed to be much less rapid when the glass is attached to a water column than when it is attached directly to the boiler; and the reason for this seems to be, that the condensation that takes place in the connections does not pass down through the glass, but is retained in the column. Much less of the iron rust and other solid matter will be taken over into it, too.

Inspectors' Reports.

FEBRUARY, 1890.

During this month our inspectors made 4,652 inspection trips, visited 9,182 boilers, inspected 3,883 both internally and externally, and subjected 548 to hydrostatic pressure. The whole number of defects reported reached 7,898, of which 739 were considered dangerous; 36 boilers were regarded unsafe for further use. Our usual summary is given below:

Nature of Defects.	Whole Number.	Dangerous.
Cases of deposit of sediment,	380	16
Cases of incrustation and scale,	708	51
Cases of internal grooving,	39	7
Cases of internal corrosion,	218	19
Cases of external corrosion,	561	46
Broken and loose braces and stays,	136	48
Settings defective,	193	24
Furnaces out of shape,	274	6
Fractured plates,	213	72
Burned plates,	128	33
Blistered plates,	173	15
Cases of defective riveting,	1,658	63

Nature of Defects.	Whole Number.	Dangerous.
Defective heads,	86	30
Serious leakage around tube ends,	1,796	146
Serious leakage at seams,	434	31
Defective water gauges,	215	20
Defective blow-offs,	62	16
Cases of deficiency of water,	6	4
Safety-valves overloaded,	39	15
Safety-valves defective in construction,	60	23
Pressure gauges defective,	259	26
Boilers without pressure gauges,	19	19
Unclassified defects,	241	9
Total,	7,898	739

Boiler Explosions.

FEBRUARY, 1890.

MINE (24). On February 1st a battery of three large boilers at the Atlas Company Works, near Dunbar, Pa., exploded shortly after the miners had gone into the drift. The engineer was absent, oiling some distant machinery, and no lives were lost.

LOCOMOTIVE (25). A freight engine of the Columbus, Shawnee & Hocking Road exploded in the Big Four round-house at Columbus, Ohio, on February 3d, wrecking the engine and demolishing the building. The explosion was terrific, and heard all over the city, but no person was hurt. The loss will be about $1,000 to the engine, while the round-house will have to be rebuilt.

ELECTRIC LIGHTING STATION (26). A main steam pipe burst on the fourth floor of the Edison electric lighting station, Sansom Street, Philadelphia, on February 4th. William Booth, Charles Heron, John Bushell, James Abbey, and William Heron were injured. Booth and Charles Heron were severely scalded about their faces and hands; Bushell received a contusion of the right wrist by falling from the top of the boiler upon which he had been standing, and was slightly scalded; Abbey and William Heron were not badly injured by the steam, but the former received a contusion of the left side by being thrown against some object by the force of the explosion.

SAW-MILL (?) (27). On February 4th a boiler exploded in Collinwood, Minn., killing the engineer.

SAW-MILL (28). On February 7th a boiler exploded in E. C. Burns's saw-mill, a mile and a half east of Bowdon, Ga., tearing William Widener, the engineer, into fragments. The boiler and the engine were blown almost two hundred yards. Mr. Burns, the proprietor, was cut in the face by flying fragments.

SAW-MILL (29). On Wednesday, February 5th, the boiler in Smith & Dautzler's saw-mill at Goodbys, near Harlin City, S. C., exploded, killing the engineer and injuring a colored attendant.

COLLIERY (30). A boiler exploded on February 5th, at a coal shaft at Winchester, Ill. The engine and boiler-house were completely wrecked, and the engineer was fatally injured.

SAW-MILL (31). The boiler in Mr. M. L. Watkins's saw-mill, near Myrtle Station, Va., exploded on February 7th, instantly killing the engineer and fatally wounding the fireman. The boiler was found 200 feet from its original position.

SAW-MILL (32). A flue collapsed in one of the boilers of the Standard Lumber Company's mill, at Dubuque, Iowa, on the morning of February 10th. There are ten boilers in the concern, but only four were running at the time. The engineer, Joseph Reed, was fatally scalded, and died at noon. The fireman, Richard Rigler, was blown 250 feet, landing on the ice in the river. He was scalded, and sustained other injuries that will prove fatal. The damage to the building was slight.

LOCOMOTIVE (33). A remarkable boiler explosion occurred in Boston at the Station street crossing of the Providence division of the Old Colony Railroad, on February 11th. Just as the 4:02 o'clock outward-bound train was approaching the Roxbury station, the boiler of the locomotive burst with a terrible roar, and a gaping seam three feet in length opened up at the upper part of the shell near the steam dome. From this aperture boiling-water and steam were thrown fully 100 feet into the air, falling on the train of passenger cars. The engineer, Horace Walton, was slightly scalded about the hands.

LOCOMOTIVE (34). The boiler of engine No. 29, on the Pittsburgh, McKeesport & Youghiogheny Railroad, exploded on February 13th, near Douglass station. One man was killed, two were fatally injured, and two others were painfully hurt. The locomotive, it is said, had been condemned some time ago, but was fixed up, and was to be worked on a gravel train for a few trips until other arrangements could be made.

STEAM TUG (35). On February 15th the boilers of the tug *Alpha*, owned by F. & G. Russell, of Brooklyn, exploded in Newtown Creek, completely wrecking the vessel. No one was injured.

SAW-MILL (36). A boiler exploded in Poell & Hollowman's saw-mill at Aboskie, N. C., on February 17th, instantly killing the colored fireman. Mr. Poell's eyes were put out, and he was seriously injured otherwise, so that he is not likely to recover. Another man, whose name we could not learn, was also injured.

ROLLING MILL (37). On February 19th an explosion occurred in the rolling mill at Everson, Pa., killing one man and injuring several others.

GREENHOUSE (38). Winfield Southerland, about forty years of age, employed at C. Strauss & Co.'s greenhouses on the Bladensburg road, Washington, D. C., was killed, on February 20th, by the explosion of one of the boilers. Southerland was alone in the building, and the engineer, George Pollard, was standing outside. A portion of the roof was blown off, and the machinery was badly shattered. A section of the broken boiler struck Southerland on the chest and crushed nearly through his body. His limbs were also frightfully mangled, and death must have been almost instantaneous.

DISTILLERY (39). On February 21st a boiler exploded at one of the large distilleries of J. B. Laniere, at Salisbury, N. C. Two men were killed, two others fatally injured, and several others seriously injured. The distillery building was blown to pieces.

PACKING HOUSE (40). On the morning of February 22d the boiler at the Armour-Cuddahy packing-house, at South Omaha, Neb., exploded. Jack Tighe, head fireman, was killed. Hans Olsen, coal wheeler, died from inhaling hot air. Sam. Gibson, Ed. Miskel, and James Black will probably die from their injuries. Nine others were badly burned and hurt by falling walls.

SAW-MILL (41). The boiler of Hunter Brothers & Co's saw-mill, at Ruthers Glen, Va., exploded, on February 22d, with terrible violence. Two persons were killed and six badly injured. The victims, all colored, were employes about the mill. The killed

were William James and Henry Johnson. Injured: Samuel Fox, leg broken in two places, and badly scalded; Jefferson Washington, leg broken, and scalded about the face; John Jackson, face and body scalded; Benjamin Beaman, found under the mill shed, badly scalded about the face, and with an arm broken.

TUG-BOAT (42). The tug boat *Flora D.* blew up, on February 23d, in Whitehouse Bend, near Mobile, Ala. The vessel had stopped for repairs to the engine, and one of the firemen was on the bank putting on a hawser, when the boiler exploded with a terrible report, and the boat was blown almost to pieces and sank immediately. Engineer Wm. Grimsley and his son and the colored cook were killed. Pilot Thomas Rowell was badly cut about the head, and is now in the hospital here. Captain Miller was slightly injured by the flying fragments of the boat.

BANK BUILDING (43). The boiler at Nagle & Ball's, under the Northern National Bank at Big Rapids, Mich., exploded on February 23d, seriously injuring the man in charge, and badly wrecking the building.

BARBER SHOP (44). The boiler in the bath-room of a barber shop at Detroit, Mich., exploded on February 24th, fatally injuring Joe Shaw, an employe, and stunning Fred Stearns, who was taking a bath.

SIZING ESTABLISHMENT (45). A boiler in the sizing establishment of Eastwood & Co., 20 Globe Street, Fall River, Mass., blew up on February 25th. Mr. Eastwood was seated in his office, not three feet distant from the boiler, when it exploded. The entire front of the building was forced outward by the concussion, and heavy doors on either side were blown into the street. Not a pane of glass was left intact. Mr. Eastwood escaped with slight bruises.

PUMPING STATION (46). An explosion occurred at Zabalza, a pumping station on the Mexican Central Railroad, near El Paso, Tex., on February —th. The boiler burst and killed the two pumpers, who were both Americans, and the pump-house was burned to the ground.

Words that Laugh and Cry.

Did it ever strike you that there was anything queer about the capacity of written words to absorb and convey feelings! Taken separately they are mere symbols with no more feeling to them than so many bricks, but string them along in a row under certain mysterious conditions and you find yourself laughing or crying as your eye runs over them. That words should convey mere ideas is not so remarkable. "The boy is fat," "the cat has nine tails," are statements that seem obviously enough within the power of written language. But it is different with feelings. They are no more visible in the symbols that hold them than electricity is visible on the wire; and yet there they are, always ready to respond when the right test is applied by the right person. That spoken words, charged with human tones and lighted by human eyes, should carry feelings, is not so astonishing. The magnetic sympathy of the orator one understands; he might affect his audience, possibly, if he spoke in a language they did not know. But written words: How can they do it! Suppose, for example, that you possess reasonable facility in grouping language, and that you have strong feelings upon some subject, which finally you determine to commit to paper. Your pen runs along; the proper words present themselves, or are dragged out, and fall into their places. You are a good deal moved; here you chuckle to yourself, and half a dozen of lines further down a lump comes into your throat, and perhaps you have to wipe your eyes. You finish, and the copy goes to the printer. When it gets into print a reader sees it. His eye runs along the lines and down the page until it comes to the place where you chuckled

as you wrote; then he smiles, and six lines below he has to swallow several times and snuffle and wink to restrain an exhibition of weakness. And then some one else comes along who is not so good a word juggler as you are, or who has no feelings, and swaps the words about a little, and twists the sentences; and behold, the spell is gone, and you have left a parcel of written language duly charged with facts, but without a single feeling.

No one can juggle with words with any degree of success without getting a vast respect for their independent ability. They will catch the best idea a man ever had as it flashes through his brain, and hold on to it, to surprise him with it long after, and make him wonder that he was ever man enough to have such an idea. And often they will catch an idea on its way from the brain to the pen point, turn, twist, and improve on it as the eye winks, and in an instant there they are, strung hand in hand across the page and grinning back at the writer: "This is our idea, old man; not yours!"

As for poetry, every word that expects to earn its salt in poetry should have a head and a pair of legs of its own, to go and find its place, carrying another word if necessary on its back. The most that should be expected of any competent poet in regular practice is to serve a general summons and notice of action on the language. If the words won't do the rest for him it indicates that he is out of sympathy with his tools.

But you don't find feelings in written words unless there were feelings in the man who used them. With all their apparent independence they seem to be little vessels that hold in some puzzling fashion exactly what is put into them. You can put tears into them, as though they were so many little buckets; and you can hang smiles along them, like Monday's clothes on the line, or you can starch them with facts and stand them up like a picket fence; but you won't get the tears out unless you first put them in. Art won't put them there. It is like the faculty of getting the quality of interest into pictures. If the quality exists in the artist's mind he is likely to find means to get it into his pictures, but if it isn't in the man no technical skill will supply it. So, if the feelings are in the writer and he knows his business, they will get into the words; but they must be in him first. It isn't the way the words are strung together that makes Lincoln's Gettysburg speech immortal, but the feelings that were in the man. But how do such little, plain words manage to keep their grip on such feelings? That is the miracle. — *New York Sun.*

The Music of Fishes.

In connection with the article on the music of Pascagoula, which we reproduce in this issue, Mr. William Jay Youmans, editor of the *Popular Science Monthly*, makes the following remarks: Prof. G. Brown Goode, in his work on *American Fishes*, mentions several species to which the name Drum has been given because of their ability to produce sounds. In his account of the Sea Drum he says: "Another historical incident is connected with *Pogonias*. The legend of Pascagoula and its mysterious music, deemed supernatural by the Indians, is still current. 'It may often be heard there on summer evenings,' says a recent writer. The listener being on the beach, or, yet more favorably, in a boat floating on the river, a low, plaintive sound is heard rising and falling like that of an Æolian harp, and seeming to issue from the water. The sounds, which are sweet and plaintive, but monotonous, cease as soon as there is any noise or disturbance of the water.' Bienville, the French explorer, heard the music of Pascagoula when he made his voyage, in 1699, to the mouths of the Mississippi, and his experiences are recorded in his narrative." Speaking of the Lake Drum, Prof. Goode remarks: "These names, 'Croaker,' 'Drum,' 'Thunder-pumper,' etc., refer to the croaking or grunting noise made by this species in common with most Sciænoids. This noise is supposed to be made in the air-bladder by forcing the air from one compartment to another."

The Locomotive.

HARTFORD, APRIL 15, 1890.

J. M. ALLEN, *Editor.* A. D. RISTEEN, *Associate Editor.*

THE LOCOMOTIVE *can be obtained free by calling at any of the company's agencies.*
Subscription price 50 *cents per year when mailed from this office.*
Bound volumes one dollar each.

Papers that borrow cuts from us will do us a favor if they will plainly mark them in returning, so that we may give proper credit on our books.

WE have received the report issued for 1889 by the *Sächsischer Dampfkessel Revisions Verein*, of Chemnitz. It contains, among other interesting data, a table showing the efficiencies of various types of boilers as determined by actual experiment, most of the trials having been repeated several times with various kinds of fuel, and the differences in the results noted.

THE *Boston Journal of Commerce* has kindly sent us a copy of Mr. Thomas Hawley's *Treatise on the Arc Indicator*. Mr. Hawley is editor of the steam engineering department of the paper, and has made the present little treatise very attractive. In addition to general information and point concerning indicator practice, a very useful table of the properties of steam is given, which is in itself worth the twenty-five cents that the book costs.

FROM Messrs. John Wiley & Sons, 15 Astor Place, New York, we have received a copy of Mr. H. C. Godwin's recent pocket book on railroad engineering and exploratory surveying. The title of the work is the *Railroad Engineers' Field Book and Explorers' Guide*. It contains 358 pages, and the price is $2.50. It treats, in succession, of railroad location, railroad construction, reconnoissance and exploratory surveys, and general matters useful to the engineer. In the tables at the end Mr. Godwin avoids logarithms, and gives natural functions instead, on the ground that the party in the field (for whom the book is intended) rarely has need of the accuracy that the use of them implies; and we are inclined to believe he is correct. Twenty tables are given, in all, covering nearly everything the field party could have use for.

THE Franklin Institute has just published an *Index to the Journal of the Franklin Institute, from 1826 to 1885*. It is a volume of over four hundred pages, and includes an index of subject matter and an index of authors. The history of the journal is briefly given in the preface to the present volume. The *Franklin Journal* began in 1826, being then published by Judah Dobson under the patronage of the Franklin Institute. Four volumes were issued under this arrangement, which continued in force for two years. In 1828 the name was changed to the *Journal of the Franklin Institute*, which name has been retained down to the present time. The index is very complete and very creditable to the compilers; and it greatly facilitates the finding of articles, especially of those published some years ago.

On Saturday, March 1st, a flue collapsed in a two-flue boiler at the Massillon Paper Company's works, Massillon, Ohio, doing a property damage of $300, but fortunately injuring nobody. The collapse occurred near the rear end of the boiler, and the flue was blown through the roof of the boiler-house, landing about 100 feet away. The disabled boiler was one of a battery of five, working under 80 lbs. pressure.

On Tuesday, March 25th, when the fleet steamer *City of Paris* was within 216 miles of Fastnet Rock on her east-bound trip, an explosion of some sort took place on board. The low-pressure cylinder of the starboard engine was broken into fragments, and the engine wrecked. A hole was smashed through the double hull of the ship, and the port engine was flooded and rendered useless. She drifted helplessly until Friday morning, when the steamer *Aldersgate* came up and took her in tow. She reached Queenstown on Sunday morning at about 4 o'clock A. M., with about 2,000 tons of water aboard. The Inman Line officers have thus far been unwilling to give fuller particulars.

Attention was called long ago to the great mortality among babies; and it was remarked that if a like mortality existed among calves or young pigs, a Congressional committee would be appointed to investigate it. Meetings would be held, testimony would be taken from expert pig-raisers, Congress would pass appropriate resolutions, and no doubt the whole proceedings would be published by the Government Printing Office and circulated among farmers and stock-raisers all over the land. But the babies must look out for themselves.

A similar thought is suggested by the present prevalence of pneumonia. This disease is universally admitted to be contagious and virulent among animals, and the strictest laws are passed (and *enforced*) to prevent the spread of it. Infected animals are killed, the carcasses are destroyed, and the State pays the bills. Yet in the case of man pneumonia is not usually recognized as contagious, and frequently no steps whatever are taken to disinfect either the patient's clothing or the room occupied by him.

Why is this thus?

Water Analysis.

As a general rule it is quite unnecessary to make a chemical analysis of feed-water, for our inspectors can usually tell from their experience in any given locality whether the water there is good or not, and can suggest a proper remedy in case it is not. However, it sometimes happens that water is particularly troublesome, and that the remedies that unaided experience suggests do not prove efficacious. To meet these cases we have fitted up a chemical laboratory and secured the services of a competent chemist, and we make analyses of such waters. The analyses that we make, however, are qualitative and not quantitative, except that we determine the amount and character of the scale, or other deposit that will be formed. We do not undertake to determine anything but the fitness of the water for use in boilers, and the remedy that should be applied to prevent the formation of scale or the corrosion of the boilers.

When a feed-water gives so much trouble that an analysis is deemed necessary, the sample sent should be as nearly like the average supply as possible, and should be enclosed in a *perfectly clean* bottle of clear glass, which should be of one or two quarts capacity, and should be thoroughly washed out, several times, with water from the same source as that to be sent. It may then be corked up tightly with a new cork — one that has never been used before — and packed in a box of sawdust and forwarded to us by express. A bottle that has contained cider, wine, medicine, or any like substance, should never be used for this purpose. Such bottles can rarely be washed so clean as

not to affect the analysis. Anyone sending us water should also furnish us with a full description of the source from which it was taken, and should state in what respect it is found to be troublesome. By so doing he will aid us greatly in suggesting a remedy.

When the fitness of water for drinking and domestic purposes is in question, an investigation particularly directed to this end should be made. In such work a microscopic study of minute organic growths is often required, and the water to be examined should be selected by the chemist himself, after a careful survey of the surroundings. Such work should be given to the nearest specialist in this department of analysis; we cannot undertake to do it, as it lies entirely outside of our line of business.

Equivalent Evaporation.

When a boiler trial has been made, and the number of pounds of water evaporated per pound of coal has been determined, it is customary to reduce the results to what they would have been, under standard conditions of steam pressure and temperature of feed. For example, in the trial described in the March issue of THE LOCOMOTIVE the water actually evaporated per pound of coal was 8.32 lbs., under a steam pressure of 80.5 lbs., and with feed water at 43° Fah.; and for the sake of comparing the performance of this boiler with the performance of other boilers we reduced the 8.32 lbs., actual evaporation, to the equivalent evaporation at atmospheric pressure and with feed water at 212°. There is no reason why we should reduce to feed at 212° and pressure at 0 lbs., except that the custom of using these as standards has grown into use, and as all engineers reduce their measurements to the same standard, it is easy to compare different results with one another.

In order to calculate what the evaporation would be, under circumstances different from those prevailing at the time the test was made, it is first necessary to have a table giving the total heat of steam at different pressures. Such a table is given below:

Pressure by Steam Gauge.	Total Heat in One Pound of Steam (from zero).	Pressure by Steam Gauge.	Total Heat in One Pound of Steam (from zero).	Pressure by Steam Gauge.	Total Heat in One Pound of Steam (from zero).
Pounds.	Heat Units.	Pounds.	Heat Units.	Pounds.	Heat Units.
0	1,179	35	1,199	70	1,210
5	1,183	40	1,201	75	1,211
10	1,187	45	1,203	80	1,213
15	1,190	50	1,205	85	1,214
20	1,193	55	1,206	90	1,215
25	1,195	60	1,208	95	1,216
30	1,197	65	1,209	100	1,217

By the expression "total heat in one pound of steam, from zero," we mean the number of heat units (or, in popular language, the number of "degrees" of heat) that must be put into a pound of water at zero, to turn it into one pound of steam of given pressure. Thus, opposite 75 pounds gauge pressure we find the number 1,211. This means that 1,211 degrees of heat must be put into one pound of water at temperature zero, to change it into a pound of steam at pressure 75 lbs. In other words, the amount of heat that will transform a pound of water at 0° Fah. into a pound of steam at 75 lbs. pressure, is capable of raising the temperature of 1,211 pounds of water, by one degree Fah. Of course water does not exist at zero Fahrenheit, it being converted into ice before its temperature falls below 32°; but it is convenient to speak of it as still being water, and no error is introduced by so doing.

The actual pressure of steam in the test described in our March issue was 80½ lbs. From the table above we see that it takes 1,213 degrees of heat to raise a pound of water *from zero* into a pound of steam at 80½ lbs. pressure. Now the actual temperature of the feed was 43° Fah., so that 43 of these 1,213 degrees were already in the water, and we had only to supply the balance, or 1,213 — 43 = 1,170. Into every pound of water that we evaporated, therefore, we had to put 1,170 degrees of heat.

If the feed water had had a temperature of 212°, and we had only been required to turn it into steam at 0 lbs. gauge pressure, into each pound of water it would have been necessary to put 1,179 — 212 (= 967) degrees of heat. With the same total quantity of heat, therefore, we should have evaporated more pounds of water from and at 212° than we did under the real conditions, in the proportion of 967 to 1,170. The total quantity evaporated under the real conditions being 59,538 lbs., the total quantity evaporated under the assumed conditions would have been as follows:

967 : 1,170 :: 59,538 : total weight from and at 212°.

To find the last term in this proportion we multiply 59,538 by 1,170, and divide the product by 976; 59,538 × 1,170 = 69,659,460; and 69,659,460 ÷ 967 = 72,037 lbs., which is the weight of water that would have been evaporated if the temperature of the feed had been 212°, and the gauge pressure 0 lbs. The water that would have been evaporated from and at 212°, *per pound of coal*, is found by dividing 72,037 by 7,152 (the number of pounds of coal used). 72,037 ÷ 7,152 = 10.07 lbs., which agrees with the result given on line 19 of the table on p. 47 of our last issue.

If it were desired to calculate the number of pounds of water evaporated *per pound of coal*, with the feed-water at 212° and the steam gauge at 0 lbs., having given the evaporation per pounds of coal with the feed-water at 43° and the steam pressure at 80½ lbs., we should use the same proportion:

i. e., 967 : 1,170 :: 8.32 : evaporation per lb. of coal, from and at 212°.

The 8.32 is the water evaporated per pound of coal under the actual conditions, and is found by dividing the total amount of water evaporated (59,538 lbs.) by the total amount of coal burned (7,152 lbs.). Thus: 59,538 ÷ 7,152 = 8.32 lbs. of water, actually evaporated per pound of coal. The proportion given above is solved by multiplying 1,170 by 8.32 and dividing the product by 967. Thus: 1,170 × 8.32 = 97,344; and 97,344 ÷ 967 = 10.07 lbs. of water evaporated per pound of coal, from and at 212°. This agrees, as before, with line 19 on page 47 of our March issue.

As the horse-power developed by a boiler is a rather uncertain quantity, depending very largely upon the performance of the engine using the steam, the Centennial committee on these matters suggested, as a fair average, that a horse-power, in rating boilers, be considered equivalent to the evaporation of 30 lbs. of water per hour with the steam gauge at 70 lbs. and the feed-water at 100° Fah. Engineers have accepted this very generally as a fair basis for estimating horse-power; and the results attained in boiler trials are therefore usually reduced to this standard also. Taking our previous example, with 59,538 lbs. evaporated under 80½ lbs. pressure, and with feed-water at 43°, let us see what results would have been obtained had the pressure been 70 lbs. and the temperature of the feed 100°. The total heat of a pound of steam at 70° is 1,210 degrees. Subtracting the 100° already in the feed-water, we find that 1,110 degrees have to be put into a pound of water at 100° to change it into steam at 70 lbs. We have already seen that the quantity of heat taken up by each pound of water in passing from water at 43° to steam at 80½ lbs. was 1,170. Hence the proportion is:

1,110 : 1,170 :: 59,538: evaporation from 100° and at 70 lbs.

59,538 × 1,170 = 69,659,460; and 69,659,460 ÷ 1,110 = 62,756, which is the number of pounds of water that would have been evaporated during the trial, had the steam gauge been at 70 lbs., and the feed-water at 100°. The trial lasted 15 hours; hence

62,756 ÷ 15 (= 4,184) is the number of pounds of water that would have been evaporated by the boiler, per hour. Since 30 pounds of water per hour, under these conditions, is considered to be equal to one horse-power, the total horse-power of the boiler is found by dividing 4,184 by 30. (4,184 ÷ 30 = 139.5). Hence, according to the Centennial rating, the horse-power of this boiler was 139.5.

The only way in which the engineer is at all likely to make a mistake in calculating equivalent evaporation, is in getting the first two terms of his proportion turned around. For instance, he might possibly write the last proportion, above, in this way:

1,170 : 1,110 :: 59,538 : evaporation from 100° and at 70 lbs.

A little thought will always enable him to see whether his answer should be larger or smaller than the third term in the proportion; but in order to save him this trouble we propose the following "rule of thumb," which will always give the correct result. The second term in the proportion (the one just before the four dots) should be the number of degrees of heat put into each pound of water under the *actual* conditions; and the third term (the one just after the four dots) should be the number of pounds of water evaporated under the *actual* conditions. That is, the numbers immediately before and immediately after the four dots relate to the performance of the boiler under the actual conditions; and the other numbers relate to its performance under the assumed conditions.

The Mysterious Music of Pascagoula.

Any one examining a map of the Mississippi coast will find indicated thereon, about one hundred miles east of New Orleans, the town of Scranton or East Pascagoula, situated at the mouth of the Pascagoula River. The waters of this river have become famous in song and story for the strange sounds which they give forth as they slowly make their way to the Gulf. For forty years or more a great deal has been written in prose and verse about this mysterious music of Pascagoula, yet no one that I know of has ever attempted to give an accurate description or a plausible explanation of the phenomenon. In the following paper it is my purpose to describe the sounds as I have often heard them, and for an explanation of the mystery to give a theory, long since advanced by Darwin and the Reverend Charles Kingsley, to explain the cause of similar music heard on the southern coast of France.

It was late one evening in September, 1875, that I first heard the mysterious music of Pascagoula. An old fisherman called me from the house where I then was, to come down on the river-bank and "hear the spirits singing under the water." Full of eager curiosity, I readily obeyed the summons, and if what I heard cannot be properly called music, it was certainly mysterious. From out of the waters of the river, apparently some forty feet from its shelving bank, rose a roaring, murmuring sound, which gradually increased in strength and volume until it had reached its height, when it as slowly descended. It may be represented as follows:

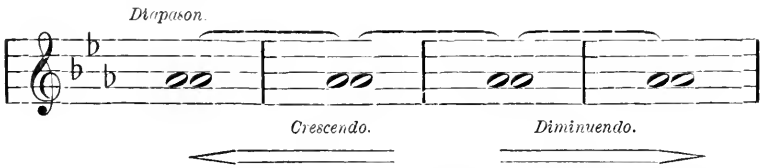

It never advanced or receded, but seemed always in the same spot; and though I remained there some time, it never ceased, but continued to rise and fall in the manner that I have indicated above. The reader may obtain a better idea of the music if he will place his ear against a telegraph-pole, the timber of which, acting as a sounding-board for the wires that are played upon by the wind, gives forth a strange, tremulous sound

that is an exact counterpart of the "music of Pascagoula," — with this difference, however, that whereas the music of the wires is very wavering and tremulous, that of the water rises and falls with a steady swell.

One evening in October, some years after the event above-mentioned, while seated on an old wharf on the banks of the Pascagoula River, idly watching the ever-varying and shifting hues of the setting sun, pointing with my finger across the wide extent of marsh that stretched before me to a squall that was raging in the Gulf, I remarked to my companion how distinctly we could hear the roar of the wind, though the storm was so far off. "That," she replied, "is not the storm that you hear, but the mysterious music." Approaching the edge of the wharf upon which we sat, and leaning over, I soon ascertained the truth of her words, for from out of the water came a roaring, rushing sound like that of a mighty wind, that may be represented thus:

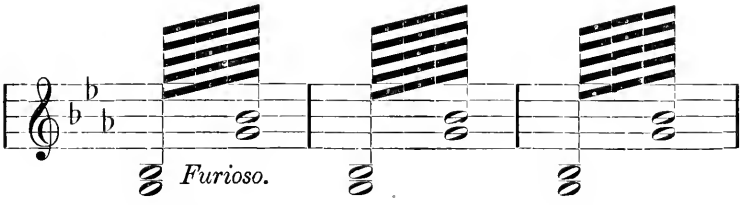

The sound, however, was not caused by the wind passing between the wharf and the water, as there was very little breeze where we were; and though I visited the spot some time afterward, it abated but little. I have been frequently told by fishermen that, when fishing at night on the waters of the Pascagoula, should they hear the mysterious music and make an unusual sound by splashing the water with an oar or jumping overboard, the music will instantly cease, to begin again as soon as all is quiet.

A few days ago I was told by a lady residing here that one night this summer, while rowing upon the river, she heard the music. "As we approached the sound," she said, "it seemed to go away from us, but we continued to follow it even some distance up the bayou on the other side of the river, when, for fear of losing ourselves in the intricate windings of the bayou, we left it."

My friend, the late Rev. R. G. Hinsdale, of Biloxi, has told me that at this place there are three different kinds of this music heard, viz.: the first is like that I have described; the second is a quick, sharp note sounded at different intervals, like this:

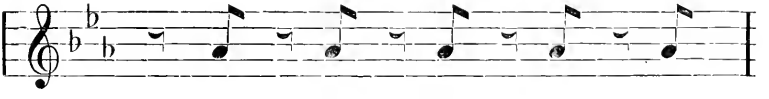

The third is another note repeated twice, as follows:

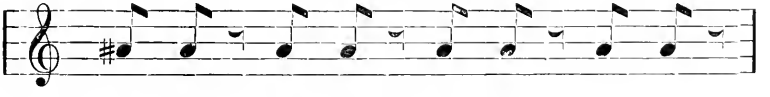

As I have before hinted, I have no theory of my own to offer in explanation of the strange phenomenon known as the mysterious music of Pascagoula, but shall merely give the theory that was advanced by Darwin years ago. In his *Descent of Man*, page 347 (revised edition), Darwin says, "The last point which need be noticed is, that fishes are known to make various noises, some of which are described as being musical. Dr. Dufossé, who has especially attended to this subject, says that the sounds are voluntarily

produced in several ways by different fishes: by the friction of the pharyngeal bones; by the vibration of certain muscles attached to the swim-bladder, which serves as a resounding board; and by the vibration of the intrinsic muscles of the swim-bladder. By this latter means the Trigla produces pure and long-drawn sounds which range over nearly an octave. But the most interesting case for us is, that of two species of Ophidium, in which the males alone are provided with a sound-producing apparatus, consisting of small movable bones, with proper muscles, in connection with the swim-bladder. The drumming of the Umbrinus in the European seas is said to be audible from a depth of twenty fathoms, and the fishermen of Rochelle assert that 'the males alone make the noise during the spawning-time, and that it is possible, by imitating it, to take them without bait.'"

Whether or not these fishes inhabit or visit the waters of the Pascagoula, I am unable to say; but if Darwin's views are correct, and I have no doubt that they are, then we have a very probable explanation of the mysterious music; if not, then we are as much in the dark as ever. — *Charles E. Chidsey, in Popular Science Monthly.*

The First Chronometer.

Mr. Samuel Nott, the well-known civil engineer of Hartford, has called our attention to the following article, taken from the *San Francisco Commercial News and Insurance Record*, for Feb. 28, 1889:

Naval and military histories are usually so fully occupied with descriptions of battles and warlike operations that only scanty space is devoted to the merits and ingenuity of those humble individuals whose inventions and discoveries have so largely contributed to the safety and well-being of the nautical world. Next to the mariner's compass, says the *Liverpool Journal of Commerce*, probably no instrument has aided the development of modern navigation so much as the chronometer of which Mr. John Harrison, justly known at the latter part of last century as "longitude" Harrison, was undoubtedly the inventor, though the appearance of the modern instrument is so very unlike that of the first time-keeper, as made by him, that not much more than the original and invaluable principle remains. Born in 1693, Harrison was brought up to the trade of a carpenter and joiner, but his attention was early directed to clock making. In those days, when the wheel work of ordinary clocks was usually entirely made of wood, it was a common practice to send them to carpenters when repairs were needed. The first important improvements made by Harrison were in the interests of astronomers, and in 1726 he invented the celebrated "gridiron" pendulum, in which, by a combination of brass and steel rods as supporters for the bob, he succeeded in constructing a pendulum whose length, measured from the center of suspension to the center of oscillation, was the same at all temperatures, and which, of course, when attached to a clock, caused the rate of losing or gaining to be constant either in summer or winter — an invaluable point in an astronomical observatory. By suitably adjusting the lengths of the brass and steel rods, it is said that Harrison's clock never varied from the truth more than a second a month in ten years! He also invented the ingenious mechanism known as the "maintaining power," by the application of which a clock or watch is not affected in its rate during the operation of winding up. Both of these valuable inventions are still applied to clocks and watches almost in the same form as originally proposed by Harrison.

From the idea of a perfect clock for use on shore to one for use on board ship appears a simple step, but it was one which led Harrison into struggles with officialism which lasted for forty years, and only terminated two years before his own death in 1776, at the ripe age of 83. To our nautical readers we need not pause to explain the importance of possessing a timekeeper at sea which will always tell us Greenwich time; and even non-nautical readers can grasp the idea that difference of longitude is merely difference

of time, so that if we possess the means of finding local time at sea, and also at the same instant can see by a watch the corresponding time at Greenwich, the difference between them is the longitude. The extreme uncertainty of the means of finding longitude at sea in the early part of the eighteenth century is well attested by the rewards offered by the British government in 1714 for any methods of improvement. £10,000 was offered if the results could be depended upon within sixty geographic miles, £15,000 if within forty miles, and £20,000 if within thirty miles; half of such amounts to be given for "any such methods extending to the security of ships when within eighty miles of the shore," a test voyage to be made to the West Indies. Public attention had been much drawn to this subject by the frequent occurrence of shipwrecks round our own coasts, notably by the loss of Sir Cloudesley Shovel and a part of his fleet in 1707, and by the enormous loss of time and money ensuing from merchant vessels with valuable cargoes frequently finding themselves very far either east or west of their port of destination. In 1736, Harrison's watch was sent on its first trial to Lisbon, when it corrected the dead reckoning by 1½ degrees of longitude. This was considered so satisfactory that he received a grant of money with which to make further improvements, and also received in 1749 the high distinction of the gold medal of the Royal Society. In 1761, he submitted his improved watch for the grand trial of a voyage to the West Indies. Starting with an original error of three seconds slow, and a rate of 2.66 seconds losing, as determined by the famous Robertson, then master of the naval academy at Portsmouth, it was embarked in H. M. S. *Deptford*, leaving on November 6, 1761, with a convoy of forty-three sail, and touching at Madeira. Here a correction of 1½ degrees of longitude was made, enabling the *Deptford* to arrive three days before H. M. S. *Beaver*, which had left England ten days before her. The account of the voyage tells us that this picking up of Madeira so readily was highly esteemed, as the squadron was "getting short of beer." The *Deptford* arrived on January 26, 1762, at Port Royal, Jamaica, when the chronometer, after applying the accumulated daily rate for eighty-one days, was only five seconds in error, the position of Port Royal having been carefully determined by a transit of Mercury in 1743. Sent home in a small sloop named the *Merlin* which left on January 28th the chronometer met with rough usage in the heavy weather experienced, but on arrival at Portsmouth on March 26, 1762, the error over and above the accumulated rate for 147 days was only 1 min. 54.5 sec., equal to twenty-one geographical miles. Only £1,250 was paid to Harrison, and innumerable petty and vexatious reasons were brought forward to invalidate his claim to the full reward of £20,000. At length a further trial was ordered by taking it out to Barbadoes. Harrison, by this time was nearly 70 years old, and thirty-six years had passed since the grand idea had seized his mind. Truly, the amount of cold water he had received during that time would have chilled the enthusiasm of many a younger inventor. Like many other practical men he was not a good writer; indeed, his written description of his watch is very obscure, but in his letter to the Admiralty concerning the new trial, a paragraph occurs, which we commend to all inventors seeking government aid and patronage. He observes that "it is much harder to beat out a new road than it is to follow that road when made." The main objection raised to the finality of the former trial arose from a supposed error in the longitude of Port Royal, so in this case the longitude of Barbadoes was to be determined from eclipses of Jupiter's satellites observed with precisely similar instruments by Bradley at Portsmouth, and Maskelyne (afterwards Astronomer Royal) at Barbadoes. Sailing in the *Tartar* on March 28, 1764, the chronometer on arrival at Barbadoes on May 13th, was tested by equal altitudes on the following day, when, after applying the rate of one second per day given by Harrison before starting, it was in error only to the extent of 9½ geographical miles. Leaving Barbadoes on June 4th, in the *New Elizabeth*, the error on arrival in London on July 18th, which had accumulated during 156 days, was only fifty-four seconds above the estimated rate per day.

Incorporated 1866.

HARTFORD STEAM BOILER INSPECTION AND INSURANCE CO. HARTFORD, CONN.

Charter Perpetual.

Issues Policies of Insurance after a Careful Inspection of the Boilers,

COVERING ALL LOSS OR DAMAGE TO

BOILERS, BUILDINGS, AND MACHINERY.

ALSO COVERING

LOSS OF LIFE AND ACCIDENT TO PERSONS

ARISING FROM

Steam Boiler Explosions.

Full information concerning the plan of the Company's operations can be obtained at the

COMPANY'S OFFICE, HARTFORD, CONN.,

Or at any Agency.

J. M. ALLEN, President. W. B. FRANKLIN, Vice-Prest.
J. B. PIERCE, Secretary. FRANCIS B. ALLEN, 2d Vice-Prest.
E. J. MURPHY, M. E., Consulting Engineer.

Board of Directors.

J. M. ALLEN, President.
FRANK W. CHENEY, Treas. Cheney Brothers Silk Manufacturing Co.
CHARLES M. BEACH, of Beach & Co.
DANIEL PHILLIPS, of Adams Express Co.
RICHARD W. H. JARVIS, Prest. Colt's Fire Arms Manufacturing Co.
THOMAS O. ENDERS, President of the U. S. Bank.
LEVERETT BRAINARD, of The Case, Lockwood & Brainard Co.
GEN. WM. B. FRANKLIN, U. S. Commissioner to the Paris Exposition.
NEWTON CASE, of The Case, Lockwood & Brainard Co.
NELSON HOLLISTER, of State Bank, Hartford.
HON. HENRY C. ROBINSON, Attorney at-Law, Hartford.
HON. FRANCIS B. COOLEY, of the National Exchange Bank, Hartford, Conn.
A. W. JILLSON, late Vice-Prest. Phœnix Fire Ins. Co., Hartford, Conn
EDMUND A. STEDMAN, Treasurer of the Fidelity Co., of Hartford, Conn.
CLAPP SPOONER, Bridgeport, Conn.
GEORGE BURNHAM, Baldwin Locomotive Works, Philadelphia.
HON. NATHANIEL SHIPMAN, Judge United States Circuit Court.

A. S. Ferry, General Agent, Office at Hartford, Conn.

GENERAL AGENTS.	CHIEF INSPECTORS.	OFFICES.	
THEO. H. BABCOCK,	R. K. McMURRAY,	NEW YORK CITY.	Office, 285 Broadway.
CORBIN & GOODRICH,	WM. G. PIKE	PHILADELPHIA.	" 430 Walnut St.
LAWFORD & McKIM,	JOSEPH CRAGG,	BALTIMORE, Md.	" 22 So. Holliday St.
C. E. ROBERTS,	WM. U. FAIRBAIRN,	BOSTON, MASS	" 35 Pemberton Sq.
		PROVIDENCE, R. I.	" 29 Weybosset St.
H. D. P. BIGELOW,	H. D. P. BIGELOW,	CHICAGO, ILL	" 112 Quincy St.
C. C. GARDINER,	J. S. WILSON,	ST LOUIS, Mo.	" 404 Market St.
L. B. PERKINS,	F. S. ALLEN,	HARTFORD.	" 218 Main St.
W. G. LINEBURGH & SON,	J. H. RANDALL,	BRIDGEPORT.	" 94 State St.
GEO. P. BURWELL,	C. A. BURWELL,	CLEVELAND.	" 208 Superior St.
MANN & WILSON,	J. B. WARNER,	SAN FRANCISCO.	" 306 Sansome St.
ZOLLARS & McGREW,	T. E. SHEARS,	DENVER, COL	" Opera House Block.
C. J. McCARY & CO.,	B. F. JOHNSON,	BIRMINGHAM, ALA.	" 2015 First Av.
W. S. HASTIE & SON,		CHARLESTON, S. C.	" 44 Broad St.

The Locomotive.

PUBLISHED BY THE HARTFORD STEAM BOILER INSPECTION AND INSURANCE COMPANY.

NEW SERIES—VOL. XI. HARTFORD, CONN., MAY, 1890. No. 5

On Bulged Plates.

Our illustration, this month, shows a section of sheet that was recently removed from a large newspaper office. The exhaust steam from the engine was used for the purpose of heating the building, and all returns from the heating system, as well as the drips from the engine, were carried back to a tank and from there pumped into the boilers. A heavy animal oil was used for lubricating the cylinder of the engine, and the feed water in its natural state contained a considerable amount of vegetable matter. The organic matter thus carried into the boiler could not all be removed, for the blow-off pipe did not enter the drum at the lowest point, as it should, and a considerable quantity of water and oily matter could not be blown out. Hence any deposit that might lodge on the bottom of the shell remained there and was burned on, forming a coating that prevented the water from coming into direct contact with the iron. The

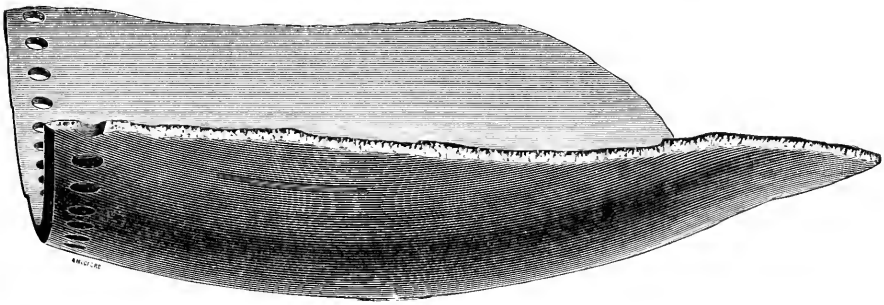

A BULGED PLATE.

sheet thus protected from the cooling effect of the water got overheated, and the steam-pressure within the boiler caused a bulge at the softened spot, as shown in the cut. The boiler from which this piece was taken was made of the best of material. Otherwise it would probably have fractured, rather than come down as much as it did, and an explosion would have been the result. Of course it is not necessary to have oil in the boiler, in order that bulging may result. A deposit of scale on the fire-sheet often causes a noticeable bulge in the plate, even when the scale has fallen down from the tubes, and is lying in a loose heap.

It is generally admitted that a coating of oil or scale will cause a plate to bag, but it is not always understood that a *very slight* coating is frequently sufficient to bring about this result, especially in the case of oil. A coating of oil that might escape the attention of the inexperienced will often cause a bad bulge if allowed to remain. Loose scale is, of course, not so bad, since it allows more or less water to circulate through it, and the plate cannot so readily become excessively over-heated.

It should be understood that the foregoing remarks on the danger from oil apply to the heavy oils, such as are used for lubrication, and not to the more volatile ones, such as kerosene. The lighter ones volatilize and pass off with the steam; while the heavy ones decompose and bake on the sheets. Kerosene, in fact, is sometimes purposely introduced into boilers to loosen up scale; though it never should be so used without the exercise of care and judgment.

Inspectors' Reports.

MARCH, 1890.

During this month our inspectors made 4,842 inspection trips, visited 9,675 boilers, inspected 3,529 both internally and externally, and subjected 616 to hydrostatic pressure. The whole number of defects reported reached 8,939, of which 569 were considered dangerous; 34 boilers were regarded unsafe for further use. Our usual summary is given below:

Nature of Defects.	Whole Number.	Dangerous.
Cases of deposit of sediment,	483	22
Cases of incrustation and scale,	838	42
Cases of internal grooving,	68	10
Cases of internal corrosion,	241	27
Cases of external corrosion,	602	29
Broken and loose braces and stays,	134	27
Settings defective,	228	17
Furnaces out of shape,	389	1
Fractured plates,	139	51
Burned plates,	186	15
Blistered plates,	219	10
Cases of defective riveting,	2,050	42
Defective heads,	61	10
Serious leakage around tube ends,	1,968	103
Serious leakage at seams,	422	22
Defective water-gauges,	245	35
Defective blow-offs,	81	17
Cases of deficiency of water,	20	12
Safety-valves overloaded,	41	9
Safety-valves defective in construction,	64	18
Pressure gauges defective,	260	28
Boilers without pressure gauges,	16	16
Unclassified defects,	184	5
Total,	8,939	569

Boiler Explosions.

MARCH, 1890.

FIRE-BOAT (47). On March 1st a fire broke out in the hold of the coal steamer *Wilkesbarre*, while she was moored at Mystic Wharf, Charlestown, Mass. The new fire-boat responded to the alarm that was rung in, and poured seven streams of water into the hold of the *Wilkesbarre*. After playing about fifteen minutes, the port boiler of the fire-boat exploded, scattering live coals and hot steam in all directions, and setting her on fire in a number of places. Several streams were at once directed to the burning fire-boat, and in a short time the flames were extinguished, but not until serious damage had been sustained. An examination showed that the fire and explosion had destroyed the fire room, burning through the bulkhead into the engine room, while the boat amidships was generally shattered. She was, of course, rendered useless, and the police boat, *Protector*, towed her to Sturtevant's dock in East Boston. No one on board the fireboat was injured, which, considering the circumstances, was very remarkable.

PILE DRIVER (48). The boiler of a pile driver engine belonging to T. A. Jones & Son, of Seattle, Wash., exploded on March 2d, severely scalding James Owen, Joseph Ryan, James Brennan, and Alexander Conley. Conley received a fracture of the leg, and was badly scalded about the face and body. The engine was situated in a small cabin on a scow, and when the explosion occurred the men were not over ten feet distant eating lunch. They were all knocked down, and the roof of the cabin blown completely off.

STEAM YACHT (49). On March 4th, Mr. H. W. Deiter, of Jacksonville, Fla., together with three friends and the regular engineer of the boat, hired the steam yacht *Blanche* to examine some land he had bought. On the return to Crescent City, the boat ran into a log, and the shock caused the boiler to explode. Mrs. Deiter was very seriously scalded about the face and abdomen, and all the others, with one exception, were more or less scalded also.

HANDLE FACTORY (50). On March 7th the large boiler at S. B. Ames & Bros'. handle factory, located at Eaton, a small town twelve miles north of Muncie, Ind., exploded with tremendous force, demolishing the engine room and badly damaging the main building. Samuel Parker, the engineer, was within five feet of the boiler at the time of the explosion, and received injuries from which he will die. Joseph Thompson, Lum Pullon, M. House, and David Modlin, were also injured. Several others were slightly hurt by the falling debris. The boiler separated near the center, one piece going south and the other north, the two sections being five hundred feet apart when found.

SAW-MILL (51). On March 8th William Harmon was killed at Turtle Bayou, Chambers County, Texas, by the explosion of a boiler in Higginbottom's saw and grist mill.

COLLIERY (52). Both heads of a boiler at the Barnum shaft of the Pennsylvania Coal Company, Pittston, Pa., blew out on March 10th. Nobody was hurt, but the damage to property caused work to be suspended for several days.

COLLIERY (53). A boiler explosion, resulting in the death of three persons, the fatal injury of one, and the less serious injury of three others, occurred on March 15th, at the northwest colliery, near Carbondale, Pa. The victims are: Albert Ross, Richard Whithington, and John Ross, killed; John Thomas, fatally burned; John Molosky, slightly injured; Henry Fenwick, head and hands burned; George Ross, burned about the arms. At the time of the accident, five slate pickers were in the boiler room eating their dinners. The engineer was alone in the engine room over the boilers. Just before the explosion the fire doors under one of the boilers blew open, and fireman Collins shouted to the slate pickers to run for their lives. Collins and one other ran out, but four attempted to run up the steps into the engine room. They got only half way when a boiler blew up. The building was shattered. A section of one of the boilers weighing several hundred pounds was thrown through the breaker, and with it the engineer, who was picked up twenty feet from the building, seriously hurt but not fatally injured.

PUMPING STATION (54). Shortly before 4 o'clock on the morning of March 16th, an explosion occurred at the Howard Street pumping station of the Alleghany waterworks, Pittsburg, Pa., which completely ruined the building. A battery of 60-horse power boilers gave way, leaving scarcely a vestige of the building. A. L. Armstrong, a son of Supt. Armstrong, was in the engine room, and the explosion knocked him down, but did him no serious injury. Three of the bricks from the wrecked building were sent whirling through the side wall of the residence of John Klein across the street.

One of them entered the room where Mr. and Mrs. Klein were sleeping, burying itself in the floor.

SHOP (55). On March 17th a boiler burst in Mr. Aldridge's shop, at Fair Curn, Ga., killing the proprietor instantly.

SAW-MILL (56). One man was killed by the explosion of a saw-mill boiler at Fayetteville, Tenn., on March 18th.

GRIST MILL (57). At St. Albans, W. Va., on March 18th, the boiler in E. Wheeler's grist mill exploded, injuring eight people.

ICE MACHINE (58). On March 20th an explosion took place at the works of the Los Angeles Ice and Cold Storage Company, Los Angeles, Cal. Two men were badly injured, and one of them will die.

SAW-MILL (59). On March 22d the boiler in a saw-mill owned by W. A. Beadles, near Wyckliffe, Ky., exploded, demolishing the mill and killing John Dennis and Frank Parker, mill hands, and badly scalding R. J. Jameson, the engineer, who will probably die. Wm. Nance, John McCauley, and Wm. Sullivan, were slightly wounded.

LOCOMOTIVE (60). The boiler of engine No. 73, belonging to the Fitchburgh Railroad, exploded in the freight yard at East Fitchburg, on March 24th. The dome was blown off and the engine overturned. Fireman Frank Johnson and brakeman Charles Smith were injured, but not fatally so.

SAW-MILL (61). A frightful boiler explosion occurred eight miles east of Newark, Ohio, on March 24th, at Claypool's saw-mill. The boiler "let go" with such force as to wreck the mill and tear everything surrounding it to pieces. Engineer Mathews was thrown 200 feet by the force of the explosion, and boards and shattered pieces of the mill were thrown in every direction. Mathews struck against a tree and was killed almost instantly.

QUARRY (62). A boiler exploded at the Grant quarry at Kokomo, Ind., on March 27th, scalding a man severely.

AXLE WORKS (63). Three men were killed, and three others badly scalded and wounded, by the explosion of an upright boiler at Spears' Axle Works, Wheeling, W. Va., on March 29th. The boiler went through the roof and north side of the building, crossed twenty-seventh Street, and fell into the stock house of the Belmont mill cooper shops.

COLLIERY (64). On March 30th a boiler explosion occurred at the Logan Colliery, Ashland, Pa. David Hower, the fireman, was severely scalded from head to foot, and died soon afterwards. John Moniskie, a laborer, received serious injuries about the body. Two smoke-stacks were blown over on the building, and twelve boilers rendered useless. One-half of the exploded boiler traveled nearly 500 feet, carrying away one of the piers under the trestle over which the dinky runs to the dirt bank.

SAW-MILL? (65). On March 31st, at Elk Park, N. C., a boiler exploded killing two men and injuring three others.

ICE-HOUSE (66). On March 31st, a boiler explosion occurred at Smith's Pond, near Wolfboro, N. H., where Messrs. Roberts, Hobbs, and Blaisdell were cutting ice. William Cummings was seriously injured and two others were slightly so.

Miscellaneous Casualties.

Numerous accidents come to our notice, that are caused by steam, but are not properly classified as boiler explosions. Among these we note the following:

On February 2d, the fishing steamer *U. S. Grant*, of San Francisco, was about to put to sea, and a heavy fire was started in her furnaces to get up steam. It is the custom to fill her boilers at night, so that everything may be in readiness in the morning; but this time the filling had been neglected. The fireman seems to have taken it for granted that the boilers were ready to start up, and proceeded accordingly. When the engineer reached the dock he found a roaring fire, in front of which the fireman and a couple of the hands were cheerfully toasting their feet. He hauled the fire immediately, and a subsequent examination showed that the boiler was badly burnt, but fortunately, not entirely ruined. It is very little trouble to examine the water level before firing up, and those that neglect it are pretty likely to make trouble sooner or later.

Early on February 6th, a sharp report was heard in the basement of the St. James Hotel, Cincinnati, Ohio, followed by the roar of escaping steam. The night clerk rushed down stairs and found Max Voigtlander, the assistant engineer, lying on the floor, unconscious. It appears that he had suddenly turned a full head of steam into a cold pipe, which had burst under the sudden strain brought upon it. Voigtlander was removed to a cool place, and soon recovered consciousness. At the hospital, cooling oils were applied to his burns, and it was found that his injuries were not so serious but that he would recover. The moral of this is, to open all valves slowly, particularly when letting steam into a cold pipe.

A disastrous and fatal accident took place on February 7th, on the British man-of-war *Baracouta*. She was off Margate, England, when one of her cylinders exploded with terrible effect. A considerable number of men were near the place when the explosion occurred. They were thrown violently in all directions. Two of them were instantly killed, and ten were injured, all more or less seriously.

The statement is made that 180 pounds pressure somehow or other got into the heating system of the North High School at Weymouth, Mass., on Feb. 21st, the coils being designed for 10 pounds. The fact was discovered by Mr. M. P. Wright, who at once took measures to relieve the boiler.

A valve burst in the Howe Cement Works at Norwich, Conn., on February 26th, and the escaping steam overpowered Henry Uterstaedt, who was near the boiler. He was found unconscious, and was dangerously burned about the face, neck, hands, and arms.

Preserving the Color of Plants.

In a paper read before the London Chemists' Assistants' Association, Mr. G. C. Druce recently read a paper on botany, in which he makes some interesting suggestions concerning the preservation of the colors of plants in herbaria.

"One great complaint about dry plants," he says, "is that the color has gone or has become altered, but this may be in some measure avoided by careful drying. My friend, Dr. Schonland, tells us of a plan they have in the Berlin herbarium for preserving the colors. The specimens are immersed in a bath consisting of three parts of sulphurous acid and one of methylated spirit. They are left in this bath until the color has been bleached out; or, if the flowers are already white, they are allowed to remain for a time varying from a few seconds to several minutes, according to their texture. They are then taken out and the superfluous moisture is removed by blotting paper, after which they are dried in the usual manner. The color gradually comes back, and will not fade again. This method answers admirably for our Campanulaceæ and Orchidaceæ,

and also for the parasitic Cuscuta or semi-parasitic Lathræa, Bartsiana, and Orobanche. My experience is, that pink colors are generally darkened by it. I am told that it answers well for the cow wheats and asperula, though my experience with the former is not yet satisfactory.

"There is some difficulty in treating flaccid flowers in this way, for when dipped in the solution they become so pulpy that it is not easy to lay them out properly. Such specimens may be laid out in parchment paper first, both paper and flower being introduced into the bath, and pressed together afterwards, the parchment being removed after the plant has dried."

Sulphurous acid is nothing but a solution of the fumes given off by burning sulphur. These same fumes are given off when copper is dissolved in sulphuric acid (oil of vitriol). The best way to prepare the bath, therefore, is to mix one part of the methylated spirit with three parts of water, and let the sulphur fumes bubble up through the mixture for a few minutes. A good apparatus for generating the sulphur fumes may be made from a pickle jar, or other wide-mouthed bottle, by inserting one end of a bent glass tube through the cork, the other end of the tube running down into the bath. A handful of copper filings and some dilute sulphuric acid are next placed in the pickle bottle, which is then tightly corked. Any leak that may exist in the cork or around the glass tube may readily be stopped up with wax. If the vitriol does not attack the copper filings readily, the generating bottle should be warmed a little.

Sulphurous acid gradually takes up oxygen from the air, and turns into sulphuric acid. For this reason the bath should be freshly prepared, since a slight trace of sulphuric acid is sufficient to turn delicate blues to pink.

A Disastrous Explosion at Pumpherston, Eng.

The following account of an explosion of a Lancashire boiler, when under only 5 pounds pressure, is taken from an English newspaper, the name of which we have unfortunately lost:

"On Saturday night a disastrous boiler explosion took place at Pumpherston Shaft Mines and Oil Works, Mid-Lothian, by which three men lost their lives, two were injured, and great damage was done to the plant. The works, which are the property of the Pumpherston Oil Company (Limited), are situated about two miles south from Uphall, rather further from Broxburn, and about the same distance north of Mid-Calder. The boiler which exploded was one of a battery of 22 double-flued Lancashire boilers, placed horizontally side by side, and built round by brick. Running parallel and close to these on the south side is a series of large tar tanks, supported on brick pillars about 12 feet high. The tar is used as fuel for the boiler furnaces, and is led into them by pipes. Some 30 yards to the north of the boilers is a bench of retorts for shale distillation, about 25 feet high, and immediately north of this runs the public road. The boiler which burst was of the usual pattern, some 25 feet long by 7 feet in diameter, and it worked at the low pressure of 5 pounds on the square inch. The steam obtained from it and its neighbors was used for feeding the retorts.

"Fortunately, at the time of the accident, a few minutes before ten o'clock, very few men were about, as the majority had gone for supper, and this fact most likely explains why there was not a very much greater loss of life. The men in attendance close to the spot at the time, were Edward Dempsey, John Scott, and John Welsh, boiler firemen, and Andrew Taylor, retort foreman. The latter had gone to see about the steam supply. All at once, the boiler exploded with a terrific noise and with disastrous effect. The men about the works, alarmed by the sound, hurried to the spot. The air was full of dust and steam, and at first nothing could be discovered. The boiler was

found lying about thirty yards to the south of its original position, with its ends blown out and only one of the furnace tubes remaining in it. The other tube had been blown against the retorts a similar distance to the north. In its flight the boiler had carried away two of the large tar tanks, with their brick supports and the corrugated iron roof which covered them. The ground was everywhere strewn with bricks and broken timbers. Scott was found lying on an ash heap some thirty yards away. He was still alive, but unconscious, and he expired about an hour afterwards. Dempsey's body was blown to the top of the bench of retorts, and half twisted round an iron railing there, the distance being about forty yards. But the terrible force of the explosion was still more fully demonstrated in the case of Taylor. He was blown into the air right over the retorts and across the public road, and his body landed on a hedge at the further side. The crushed condition of the hedge still shows the force with which the body struck it. All the bodies were fearfully mutilated, and the clothing was almost entirely torn from them. Welsh miraculously escaped with a scalp wound. A vanman named Smith, in the employment of a grocer at Broxburn, was standing at his van on the road supplying some of the workmen's wives with goods, when he received a heavy blow on the back from a flying brick. Fortunately, his injuries were not serious. Close beside where Taylor's body was found are a number of tile-roofed workmen's cottages belonging to the Uphall Company. A large part of the shower of bricks reached these, and went crashing through the roofs, and in one case broke in part of the gable. Though all the houses are inhabited, and great alarm was caused, none of the inmates were injured. Some of these damaged houses are quite 300 yards from the spot where the explosion took place. The two boilers on each side of the wrecked one were very much damaged, and their brick covering partly torn away.

"Soon after the accident, Dr. Stewart, the works' doctor, and Drs. Wilson and Smith from Broxburn, were on the scene and tendered what help they could. The bodies of the deceased were coffined at the works, and were afterwards removed to the houses where the victims had dwelt. Dempsey was over 50 years of age, and lived in lodgings at Pumpherston. He is believed to have been married, and his comrades think he has relatives in Airdrie or Greenock. Scott was about 27 years of age, lived at East Calder, and leaves a widow and three children. Taylor, who was about 40, also leaves a widow and three of a family to mourn his loss. He lived at Pumpherston. The sound of the explosion was heard for a long distance round, and people from the neighboring rows and from adjacent villages crowded to the scene of the accident, but outside the works in the darkness there was little to satisfy curiosity. No cause can be assigned for the explosion."

The Chimney of the Clark Thread Works.

On the 28th of March the big chimney of the Clark Thread Works at Harrison, N. J., was struck by lightning twice, the interval between the two strokes being only about fifteen seconds. About seventy-five cartloads of brick were dislodged in all, and a serious crack some fifty feet long was opened. In places, three courses of brick came away, leaving gashes a foot deep. The works were immediately shut down, but the chimney was kept warm to avoid bringing any extra strains upon it. No means had been provided for reaching the top of the structure, and the interesting question arose as to how this could be quickly done. After discussing the matter thoroughly, the proprietors accepted the offer of Mr. John Phillips, who is known in Newark as "Steeple Jack," to scale the outside of the chimney, a task which he accomplished in three working days by means of ladders, which he placed one above the other, securing them to the chimney by strong steel hooks driven into the brickwork. Subsequently, by

means of ropes and slings let down within the chimney, the interior walls were examined and found to be uninjured.

The following description of the mode of procedure (which is from the *Scientific American*) will be of interest: The side of the chimney opposite to that which was struck by lightning, was selected for the climbing operations. This insured a sound base for the work and avoided any danger from falling bricks. A ladder was first placed against the shaft. A block of wood was inserted between the chimney and the upper end of the ladder. The block was a little longer than the ladder was wide, and held it about seven inches out. Next, two straight-shanked hooks of seven-eighths round steel, with wedge-shaped points, were driven into the joints between two courses of brick just outside of the sides of the ladder, and as near the block as possible. The bent ends of these projected horizontally inward and gripped the sides of the ladder. The hooks were driven in until they drew the ladder and block strongly against the brickwork.

A second ladder was now drawn up by block and tackle. The end of the fall was caught over the sixth rung or thereabout, and the fall itself was lashed to the top rung. A steel hook was driven into the chimney above the top of the ladder already fixed. To this the pulley block was fastened. The ladder was drawn up from the ground, and as its top reached the chimney climber, he cut the lashing of the top rung, and guided it by hand as it rose above him. When it was so far up as to lap over the lower ladder by about five feet, the lower end of the fall was secured to a hook driven into the base of the chimney and placed there for the purpose of belaying it. The ladders were now lashed together. Going up a little further, a hook was driven outside and to the right of the upper ladder, about half way up. To this it was lashed. Next, a second hook, placed with its bend vertical, was driven a couple of rungs higher up to the left and inside the ladder, so as to catch under a rung. It was lashed to this. Then climbing up still further, the upper hooks were driven so as to grasp the ladder and cross-block exactly as below. All this while the tackle was kept belayed. To make the ends lie snug, a cross piece of board was secured across between the lower end of one ladder and the one beneath it. The tackle was now cast off, and the operation was repeated with a third ladder. In this way, a string of ladders quickly rose until the projecting bell was reached, when a variation in the process became necessary. Hitherto, with the exception of the lower one, the length of the ladders had been 17, 20, and 22 feet. Twenty-four ladders had reached the end of the plain shaft. Near the top of the upper ladder, two holes were drilled in the brickwork. In these expansion bolts were introduced. They consisted of a twelve-inch length of gas-pipe split for a few inches at the inner end. A piece of iron with expanded or pear-shaped end was introduced from the split end, and a nut was fitted near its other end, on which a thread was cut. Finally it was drawn down a little and bent into a ring or eye. When this was put into the hole, and the nut screwed up, the pear-shaped end was drawn into the pipe, opening the split end against the sides of the hole and dovetailing it firmly in place. Next, a third hole was drilled as high up as possible, and in the prolongation of the line of the ladders. A thirty-foot ladder was now drawn up until its end projected two feet above the lower edge of the iron cap. Its lower end was lashed to the lower expansion bolts. By the block and fall it was drawn in toward the upper expansion bolt, until it bent into a curve with a strain, and it was then lashed fast there. A short iron ladder, with hooks upon its upper end, was drawn up and placed upon the upper slope of the iron cap, and the work was achieved.

John Phillips, who did the climbing, is a slight built man of Scotch birth, and seems to treat his achievement as an ordinary affair. He has done one of the finest pieces of chimney climbing ever executed, and deserves great credit for bringing it to a

termination without accident of any description. In performing the work, he relied partly on a hook attached to a piece of rope which was fastened around his waist. The hook he caught in the rungs of the ladders, so as to leave both hands free. In going up and down, he attached the end of the fall to this hook and had about half his weight taken by his men working the rope from the ground. It took him about ten minutes to make the complete ascent after all the ladders were in place.

When the work of repairing was begun, six hooks of heavy steel were fastened over the edge of the iron cap, and chains were attached thereto, that hung down from the lower edge of the iron. Four blocks and falls were attached to these, by which a scaffold was hoisted that surrounded the chimney. The other hooks and chains were for the attachment blocks and falls for hoisting brick and mortar with which to execute the repairs. By the use of the hooks and chains it became possible to go on with the repairs of the exterior of the chimney while the factory was in operation. The scaffold, when hoisted to the proper level, was reached by the long string of ladders. As the loose material was removed and replaced by new, the scaffold was raised or lowered as necessary.

A statement of the dimensions of the chimney may also be of interest. It is circular, and rises with a perfectly uniform batter from the bottom to the neck below the cap. Its diameter at the base is 28 feet 6 inches, and at the neck, 14 feet. This gives a batter of 7 feet 3 inches, which corresponds to 2.85 inches to every ten feet. The total height of the chimney is 335 feet. It has one circular flue, 11 feet in diameter. At the summit, it expands into a well-proportioned capital surmounted by a cast-iron coping which weighs six tons, and is composed of thirty-two sections, which are bolted together by inside flanges, so as to present a smooth exterior. The foundation is in concrete, composed of crushed limestone 6 parts, sand 3 parts, and Portland cement 1 part. It is 40 feet square and 5 feet deep, forming a block of 8,000 cubic feet volume, and weighing about one million pounds. On this the base was started, composed, like the shaft proper, of brick laid in cement mortar. Two qualities of brick were used; the outer portions were of the first quality North River, and the backing up was of good quality New Jersey brick. Every twenty feet in vertical measurement an iron ring, 4 inches wide and $\frac{3}{4}$ to $\frac{1}{2}$ inch thick, placed edgewise, was built into the walls about 8 inches from the outer circle. As the chimney starts from the base it is double. The outer wall is 5 feet 2 inches in thickness, and inside of this is a second wall 20 inches thick and spaced off about 20 inches from main wall, and, of course, concentric with it. From the interior surface of the main wall eight buttresses are carried, nearly touching this inner or main flue wall, in order to keep it in line should it tend to sag. The interior wall, starting with the thickness described, is gradually reduced until a height of about 90 feet is reached, when it is diminished to 8 inches. At 165 feet it ceases, and the rest of the chimney is without lining. The total weight of the chimney and foundation is 5,000 tons, and it was completed in September, 1888.

"BRETHREN and sisters," and the patient old pastor buttoned his threadbare coat closer about his spare form, "I notice that some members of the congregation are shivering from the cold. I should have replaced the broken pane of glass in this window behind me weeks ago with rags, if they could have been spared from the family wardrobe. The collection for foreign missions will now be taken up."—*Chicago Tribune.*

The Locomotive.

HARTFORD, MAY 15, 1890.

J. M. ALLEN, *Editor.* A. D. RISTEEN, *Associate Editor.*

THE LOCOMOTIVE *can be obtained free by calling at any of the company's agencies.*
Subscription price 50 cents per year when mailed from this office.
Bound volumes one dollar each.

Papers that borrow cuts from us will do us a favor if they will plainly mark them in returning, so that we may give proper credit on our books.

WE desire to acknowledge the neat and tasty price-list of engines recently issued by the Armington & Sims Engine Company.

THE seventeenth report of the *Sachsisch-Thuringischer Dampfkessel-Revisions-Verein* is at hand. Among other interesting matter, it contains a list of the explosions that took place in Germany during 1888, with full particulars of each.

THE article on "Water Analysis" in the last issue of THE LOCOMOTIVE seems to have caused some misapprehension. To correct this we wish to say that we never make analyses except for the benefit of this company and its patrons, and that we cannot undertake to do work for those who do not insure with us.

MESSRS. JOHN WILEY & SONS, of 53 East Tenth Street, New York, send us a copy of the fourteenth edition of Angus Sinclair's treatise on *Locomotive Engine Running and Management.* Doubtless many of our readers have seen this book. It is not too much to say that although it contains a deal of most useful information, it is written in such a charming way that it reads like a story book. A third edition of it was published only three months after the first one was out, and since that time editions have followed one another at intervals of about six months. This shows its great popularity, and we do not hesitate to say that no engineer is old enough at the business to read this book and not profit by it.

THE *Technology Quarterly*, a magazine issued by the Massachusetts Institute of Technology, has just reached us. It is a very creditable journal, and contains much interesting and useful matter. The opening article, "The Study of Statistics in Colleges and Technical Schools," is by Gen. Francis A. Walker, president of the institute. Then follow papers on "Experiments on the Preparation of Boiled Linseed Oil," "Data and Plots of Various Incandescent Lamps," "Experiments on the Errors of Different Types of Calorimeters," "Development of a System of Amalgamation of Gold Ores," "The Fishery Question," "Some Points in the Determination of Silica in Silicates by Fusion," "Bacteria in Drinking Water," and "The Language of 'The Life of Thomas Becket.'"

WE have received from the D. Van Nostrand Company, 23 Murray St., New York, a copy of Mr. Frederick A. Halsey's treatise on *Slide Valve Gears.* The author uses the

Bilgram diagram in analyzing the valve motions, and avoids analytical investigations; for, as he says in the preface, "designing a valve-gear is essentially a drawing board process, and a mathematical treatment of it is simply an uncalled-for use of heavy artillery." His reasons for preferring the Bilgram diagram to Zeuner's are very well put. "Valve diagrams," he says, "are used for two purposes — to analyze existing valve motions, and to design new ones. The Zeuner diagram fulfils the first purpose perfectly, but is unsatisfactory when applied to the second. The leading data that are given in designing a valve motion are the point of cut-off, the port opening, and the lead of the valve. It is the radical defect of the Zeuner diagram that none of these dimensions can be laid off from known points. The lead must be laid off from an unknown point of the center line, and the port opening from an unknown point on an unknown line. Finally, through these unknown points and the center of the shaft the valve circle is to be drawn from an unknown center, and with an unknown radius. . . . With Mr. Bilgram's diagram . . . the lead is laid off from a fixed line, the port opening from a fixed point, and the cut-off position of the crank is located. . . . Finally, these marked advantages are not accompanied by any compensating disadvantages whatever." The work is divided into three parts, the first treating of the slide-valve with a fixed eccentric, the second of the slide-valve with shifting and swinging eccentric, and the third of the slide-valve with independent cut-off. It is well written and illustrated, and should be very useful to those engaged in the designing and setting of valves.

The Musical Understanding of Animals.

Experiments have recently been made in Germany to ascertain whether horses used in the army understand the bugle-calls or not. The results were purely negative. A whole troop of riderless cavalry horses were tried, but they paid no heed to the different calls. However, there is some evidence in the other direction, and the following story is told of a stampede that occurred in the western part of our own country in 1872. The horses of a cavalry regiment were tethered to a long line at night, and a hail storm that came up so frightened them that they broke loose and rushed up the valley into the district held by the Indians. It was out of the question to go after them into the enemy's stronghold in the darkness, and, as a last hope, the captain of the regiment ordered the stable call to be sounded. Every horse, it is said, returned to the encampment within a few minutes. Although this story may be doubted, it is not at all outside the range of possibility, or even probability. In fact we can vouch personally for a very similar thing. At the close of the Civil War, in 1865, the First Connecticut Cavalry regiment was mustered out at New Haven, the officers and men bringing their horses home with them. A number of the horses were sold to other persons for various purposes. At a subsequent parade of the Second Company of the Governor's Horse Guards, one of these cavalry horses, then attached to a civilian's wagon, wheeled into line when the proper bugle signal was given, to the amusement of several spectators. There could be no mistake about this horse understanding the call, for in order to get into line he tried to crowd in between two other horses where there was not room for him. Other cases are on record, in which horses have exhibited similar intelligence when "boot and saddle" and other calls have been sounded. We incline to the belief that either the German experiments were not properly carried out, or the horses had not had sufficient experience. Horses that draw street cars soon learn the significance of the starting and stopping signals sounded on the driver's bell, and even know the difference between the bell on their own car and that on a neighboring car on the other track. Drivers sometimes make use of this fact when trying to start a heavy load on an up grade, by sounding two bells at the same time that they call out to the horses.

An Austrian paper, *The Animal's Friend*, says that both horses and dogs have been proved to have good ears for music, particularly dogs, which have been known to whine piteously at certain passages, while at others they evince their delight and enjoyment by licking the performer's hand. Aristotle even went so far as to name the flute as the favorite instrument of the horse.

It is said that a musician who lived at Darmstadt some years ago had trained his dog to "raise its face to heaven and howl," whenever a false note was sung or played in his hearing. The dog used to attend operas with his master, and he won the affection of the opera-going public, and the lasting enmity of the singers, by attracting the attention of the audience to false notes by letting forth a prodigious howl. Would that we had a few such dogs on this side of the deep! By the way, we used to own a dog ourselves, who howled all the time when we tried to play the violin. At the outset it ruffled us a little, but after we had practiced a while, we gave up playing and came to agree with that dog and respect him.

Detecting the Contamination of Drinking Water.

In a paper read before the Kansas State Sanitary Association, Professor Lucien I. Blake has proposed a method for determining whether cesspools, stables, and other such things, drain into neighboring wells or not, and we think it will be useful. It is well known that contamination in this way often happens even when the well is quite remote from the source of the trouble. Various methods of testing have been proposed, but all are open to objection. One method is to pour dye-stuff into the suspected cesspools, and examine the well-water at intervals extending over several days, to see if it is appreciably colored. This method will of course detect the pollution if it be considerable in quantity, but if it is of slight extent the tinge of the water will be so faint that the eye cannot detect it with certainty. Another method is to analyze the water chemically and judge of its purity by the quantities of nitrates and of ammonia that are found The objection to this method is the expense it puts one to. A third method is to throw half a bushel or so of salt into the cesspool and test the water afterward for chlorine, salt being composed of chlorine and the metal sodium. This is a very fair method, the objection to it being that salt usually exists in all water to a certain extent, so that slight contamination might be taking place, and the method might fail to show it on account of the salt that naturally existed in the well; or, if the well-water was not previously examined for salt, contamination might be indicated by the chlorine test when none existed in reality.

Professor Blake's suggestion is that chloride or carbonate of lithium be used in the place of the salt. The mode of procedure is, to make a solution containing about an ounce of the chemical to each quart of water, and introduce it into the suspected cesspool. After a few days, a sample of water is taken from the well and boiled down in a small porcelain dish, adding more water as that in the dish evaporates, until a quart of the water has been reduced to about half an ounce. A wire is then dipped into the water in the dish and held in the flame of a Bunsen burner or a common spirit lamp. If any of the lithium is present the flame will be colored red. In all probability this red color will be obscured by the brilliant orange light due to the common salt that is always held in solution by well-water to a greater or lesser extent; but if the flame be examined by a spectroscope, the characteristic line of lithium will show itself plainly, even if the pollution is so slight that the well contains only one part of lithium in millions of water. It is true that this test requires the use of a special instrument, but most colleges and other higher institutions of learning have a spectroscope among their apparatus, and a sample of the water may be sent to the nearest available place for

examination. Such an examination ought not to be expensive, since it may be made very easily.

The object in using lithium instead of some more common substance is, that on account of its rarity there is but little likelihood of the natural well-water containing it. Almost all spring-waters contain traces of it, but these are so very minute, that except in rare instances, the natural lithium and that which filters into the well from the cess-pool will not be confounded. The carbonate and chloride of lithium cost from forty to fifty cents an ounce at retail.

Nine wells have been examined by this process in Lawrence, Kansas, and in one instance it was found that direct communication existed between the well and a neighboring outhouse.

Newspaper Accounts of Explosions.

Making up our monthly list of boiler explosions is always a ghastly task. The newspapers, trusting to the public thirst for tales of gore and horror, furnish us with the most sickening particulars whenever some poor unfortunate man is mangled or burned, and we usually have to expurgate the accounts before they will be presentable to our readers.

A boiler explosion is always a terrible thing. Year after year, perhaps, the boiler has given satisfaction, and the fireman has sat before it toasting his shins and smoking the pipe of peace. Some day, owing to neglect, or to faulty design, or to a lack of knowledge of the true condition of the boiler, the plates give way without even a fraction of a second of warning, and the fireman is no more. It would seem that the simple announcement of his death would be sufficient, and that the space in the papers now occupied by particulars of his corpse might better be filled with intelligent information about the boiler itself. In making up the list given in this issue, we note one instance in which the "shrivelled skin of the victim was removed from his body before medical aid arrived." In another instance we read that "his right eye, which seems to have been struck by a stream of boiling water, was completely cooked out." But last month we met with one account of a saw-mill explosion that told where the various members of the wretched man were found — his head, arms, and viscera. We remember that his liver was found lodged on a dusty beam in the upper part of the mill.

The newspapers claim to be educating the public taste. If this be education, truly ignorance would be bliss.

The Chicago Auditorium Building.

The following particulars concerning the great auditorium in Chicago will be of interest to our readers:

The building includes the auditorium proper, which, on ordinary occasions, will seat over 4,000 people, and which can be made to accommodate about 8,000 by utilizing the stage. It contains the most costly stage and organ in the world. A recital hall is likewise included, capable of seating 500 persons. The business portion consists of stores and 136 offices, part of which are in the tower. In the tower there is also an observatory open to the public, and the United States Signal Service occupies part of the 17th, 18th, and 19th floors. A magnificent hotel is one of the principal features. It has 400 guest rooms. The dining room and kitchen are on the top floor, and one can eat his breakfast and look far out over the lake at the same time. The grand dining-room is 175 feet long, and a banquet hall 120 feet long and built of steel, supported on trusses, spans the building.

Ground was broken for the building in January, 1887. The corner stone was laid October 6, 1887. The cope stone on the top of the tower was laid on October 2, 1889. The recital hall was dedicated October 12, 1889, the auditorium on December 9, 1889,

and the hotel on January 30, 1890. The building was completed in February, 1890. The entire structure is fire-proof; the architects were Messrs. D. Adler and L. H. Sullivan, and the cost of the building, *not including the land*, was $3,200,000, the area covered being about an acre and a half.

The total street frontage (on Congress Street, Michigan Avenue and Wabash Avenue) is 710 feet. The main building contains ten stories, and is 145 feet high. The tower above the main building contains eight floors and is 95 feet high. The lantern tower, which rises above the main tower, contains two floors, and is 30 feet high. This makes the total height 270 feet.

The first and second stories of the building are of granite, and the rest is of Bedford stone. The interior is finished in iron, brick, marble, terra cotta, and hard wood. The tower is 70 feet long and 41 feet wide, and weighs 15,000 tons. The entire building weighs 110,000 tons. The iron work cost about $600,000.

There are 17,000,000 bricks in the building, and 50,000 square feet of Italian marble mosaic floors, which contain about 50,000,000 pieces of marble, each put in by hand. There are 800,000 square feet of terra cotta arches and partitions, 175,000 square feet of wire lathing, and 60,000 square feet of plate glass.

There are 25 miles of gas and water pipes, 230 miles of electric wire and cable, and 11 miles of steel cable for moving scenes on the stage of the auditorium. There are 11 dynamos which supply 10,000 electric lights, and 13 electric motors for driving ventilating apparatus and other machinery. In addition to the electric motors, there are 4 hydraulic ones, and 26 hydraulic lifts for moving the stage platforms. There are 11 boilers, 21 pumping engines, and 13 elevators.

For the sake of comparison with other big buildings in Chicago, the following table of heights is appended:

STRUCTURE.	HEIGHT.	STRUCTURE.	HEIGHT.
Auditorium Tower Balcony, ...	260 feet.	Chamber of Commerce Building, . .	200 feet.
Board of Trade Tower Balcony, . . .	227 "	Tacoma Building, ...	164 "
Wisconsin Central Depot Tower, . . .	200 "	Rookery Building, ...	159 "
Owings Building (top of 14th story), . .	158 "	Pullman Building, ...	140 "

The Accident to the "City of Paris."

In the last number of LOCOMOTIVE we made a note of the accident to the *City of Paris*, stating that the starboard engine was wrecked, and that in all probability a hole had been broken through the hull of the vessel. Shortly after we had gone to press it came out that the hull was uninjured, and that the water had probably entered the hole through the injection pipes leading to the condenser.

Since the vessel has been docked an examination of the hull has been made, and it has been found that the outer skin (the hull is double) is not injured in the least. One of the connecting rods smashed one side of the condenser off and it was through this opening that the water entered.

A representative of *Engineering* (London) has had the privilege of examining the *City of Paris* since she was docked, and the results of his observations are given in the issue of that paper for April 18th, from which we quote. The propeller shafting passes through the skin plating of the vessel in the usual way, the outboard length being inclosed in a casing of steel plates, which extends up to the bracket that supports the other end of the shafting, and is attached to the ship's side for a certain distance by a web of

steel. It became necessary to strip off this casing, in order to make a proper examination of the shaft, and when this had been done the whole of the outer lengths of shafting, with the propeller attached, fell into the bottom of the dock.

Each of the twin shafts passes through the ship's side through a stern tube, as we have said, in the usual manner. Immediately outside there is a flange coupling of the ordinary description, by which attachment is made to the outboard length of shafting.

Immediately on the forward part of this coupling, and therefore directly outside the stern tube, the starboard shaft, 20¼ in. in diameter, was broken squarely across. The fracture was thick with rust on both faces, but there was no sign of a flaw in the metal.

The fracture of the shaft is of course sufficient to explain the subsequent racing of the engine; but it will be interesting to examine the cause of the fracture. At the stern of the vessel the shaft is supported by a bracket of cast-steel, which has a cylindrical boss six feet long and 3½ inches in thickness, in which are the usual gun-metal bush and lignum vitæ bearing strips. The bottom part of this casting was worn through for nearly the whole of its length, and much reduced in thickness where not worn through. The metal liner, one inch thick, together with its end flanges, was also worn through, and the brass sleeve of the propeller shaft had entirely disappeared with the exception of two rings, presumably the collars at the end. The shaft itself was not much injured, but the metal studs that attached the sleeve to the shaft were worn off, and the shaft was slightly worn also. In all, the wear was sufficient to let the end of the shaft down some 7 or 8 inches; and the weight of the immense propeller, and of the 58 feet of 20¼ in. shaft that lay outside the stern-tube, was so great that the shaft was fractured at the nearest point of support — that is, at the stern-tube.

After the shaft had broken the engine raced, and the heavy reciprocating parts probably displaced the shaft so as to cause severe cramping strains to come on the piston-rods and pistons. In fact, we understand that the caps on the shaft bearings were all broken, indicating that it had been raised bodily from its true position. The destruction of the engine was accomplished so quickly that it is impossible to determine the order in which the various events took place, further than we have indicated.

The damage was confined chiefly to the low-pressure portion of the starboard engine, but it was so complete that that part of it, when looked at from above, resembles a vast scrap heap. Parts of the engine, pieces of cylinder liner, floor-plates, framing, and unrecognizable masses of metal, ranging from a few pounds to many hundred-weight, lay in the engine-room in the utmost disorder. The representative sent to view the ruins on behalf of *Engineering* writes: "It may be said that the worst has happened that could happen, to the starboard low-pressure engine of the *City of Paris*. A comparatively small cause has led to this great event, from which many important lessons may be learned. The benefit of this experience will be shared not only by the owners of the *City of Paris*, but by those interested in other large steamers of a similar kind; so that this break-down will make a voyage across the Atlantic safer than before, and this advantage has been purchased without the loss of a single life, though at a great sacrifice of property. The result of the mishap should be to strengthen the confidence the traveling public feel in these magnificent modern steamers. There is no time for judging of the excellence of workmanship and material like that afforded when a piece of mechanism is being broken up. Never was an engine more thoroughly broken up than that of the *City of Paris*, and after a fairly complete examination of the débris we could see no place where faulty material or workmanship were to be found. Had not the ship been of such excellent design and construction she would not be afloat now. It is unlikely that such a remarkable train of untoward events will ever occur again, but even if they do there are certain to be additional precautions, growing from past experience, to meet them."

Incorporated 1866.

HARTFORD STEAM BOILER INSPECTION AND INSURANCE CO. HARTFORD, CONN.

Charter Perpetual.

Issues Policies of Insurance after a Careful Inspection of the Boilers,

COVERING ALL LOSS OR DAMAGE TO

BOILERS, BUILDINGS, AND MACHINERY.

ALSO COVERING

LOSS OF LIFE AND ACCIDENT TO PERSONS

ARISING FROM

Steam Boiler Explosions.

Full information concerning the plan of the Company's operations can be obtained at the

COMPANY'S OFFICE, HARTFORD, CONN.,

Or at any Agency.

J. M. ALLEN, President. W. B. FRANKLIN, Vice-Prest.
J. B. PIERCE, Secretary. FRANCIS B. ALLEN, 2d Vice-Prest.
E. J. MURPHY, M. E., Consulting Engineer.

Board of Directors.

J. M. ALLEN, President.
FRANK W. CHENEY, Treas. Cheney Brothers Silk Manufacturing Co.
CHARLES M. BEACH, of Beach & Co.
DANIEL PHILLIPS, of Adams Express Co.
RICHARD W. H. JARVIS, Prest. Colt's Fire Arms Manufacturing Co.
THOMAS O. ENDERS, President of the U. S. Bank.
LEVERETT BRAINARD, of The Case, Lockwood & Brainard Co.
GEN. WM. B. FRANKLIN, U. S. Commissioner to the Paris Exposition.
NEWTON CASE, of The Case, Lockwood & Brainard Co.
NELSON HOLLISTER, of State Bank, Hartford.
HON. HENRY C. ROBINSON, Attorney at-Law, Hartford.
HON. FRANCIS B. COOLEY, of the National Exchange Bank, Hartford, Conn.
A. W. JILLSON, late Vice-Prest. Phœnix Fire Ins. Co., Hartford, Conn
EDMUND A. STEDMAN, Treasurer of the Fidelity Co., of Hartford, Conn.
CLAPP SPOONER, Bridgeport, Conn.
GEORGE BURNHAM, Baldwin Locomotive Works, Philadelphia.
HON NATHANIEL SHIPMAN, Judge United States Circuit Court.

A. S. Ferry, General Agent, Office at Hartford, Conn.

GENERAL AGENTS.	CHIEF INSPECTORS.	OFFICES.	
THEO. H. BABCOCK,	R. K. McMURRAY,	NEW YORK CITY.	Office, 285 Broadway.
CORBIN & GOODRICH,	WM. G. PIKE	PHILADELPHIA.	" 430 Walnut St.
LAWFORD & McKIM,	JOSEPH CRAGG,	BALTIMORE, Md.	" 22 So. Holliday St.
C. E. ROBERTS,	WM. U. FAIRBAIRN,	BOSTON, MASS	" 35 Pemberton Sq.
		PROVIDENCE, R. I.	" 29 Weybosset St.
H. D. P. BIGELOW,	H. D. P. BIGELOW,	CHICAGO, ILL.	" 112 Quincy St.
C. C. GARDINER,		ST. LOUIS, MO.	" 404 Market St.
L. B. PERKINS,	F. S. ALLEN,	HARTFORD.	" 218 Main St.
W. G. LINEBURGH & SON,	J. H. RANDALL,	BRIDGEPORT.	" Franklin Block.
GEO. P. BURWELL,	C. A. BURWELL,	CLEVELAND.	" 208 Superior St.
MANN & WILSON.	J. B. WARNER,	SAN FRANCISCO.	" 306 Sansome St.
ZOLLARS & McGREW,	T. E. SHEARS,	DENVER, COL	" Granite Building.
LEITH & SHOBER.	B. F. JOHNSON,	BIRMINGHAM, ALA.	"
W. S. HASTIE & SON.		CHARLESTON, S. C.	" 44 Broad St.

The Locomotive.

PUBLISHED BY THE HARTFORD STEAM BOILER INSPECTION AND INSURANCE COMPANY.

NEW SERIES—VOL. XI. HARTFORD, CONN., JUNE, 1890. No. 6.

On the Bracing of Steam Domes.

A short time ago our attention was called to a steam dome arranged as shown in the accompanying cut. It was 36 inches in diameter, and had a flat wrought-iron head which was braced to the shell of the drum by four flat braces, each of which was $2\frac{1}{2}$ inches wide and $\frac{5}{8}$ of an inch thick. These were each twelve inches long, and were attached to head and shell in the manner shown in the cut, by a single $\frac{3}{4}$-inch rivet. Two $3\frac{1}{2}$-inch openings were made in the head for steam connections, each being re-enforced by a $\frac{7}{16}$-inch plate, seven inches in diameter.

The boiler, which was 66 inches in diameter and $\frac{3}{8}$ inch thick, communicated with

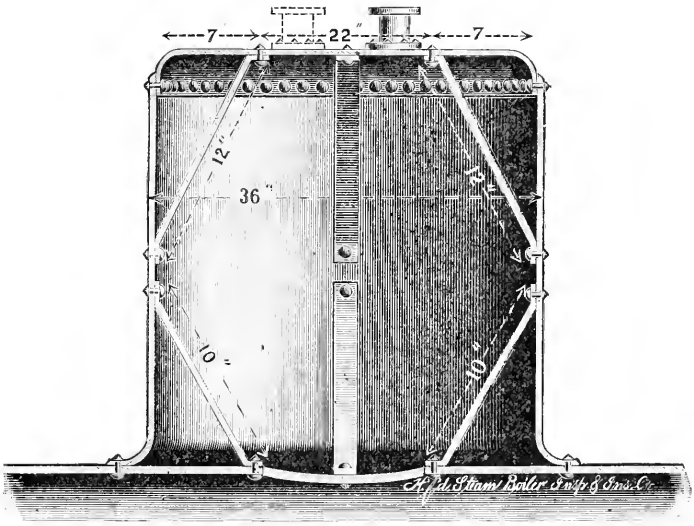

AN IMPROPERLY BRACED HEAD.

the drum by a circular opening 15 inches in diameter, which was not re-enforced. Since the steam pressure came equally upon the upper and lower sides of that part of the shell which lay within the dome, there was no strain produced in it, and therefore no need of bracing. Nevertheless, four braces had been put in similar to those above, except that they were ten inches long, and running from the shell of the drum to the edge of the hole in the boiler. Each of these was secured by a $\frac{3}{4}$-inch rivet at the upper end, and by a $\frac{5}{8}$-inch bolt at the lower end.

Allowing three inches all around the outside of the head of the dome, as the amount that can be safely considered to be stiffened sufficiently by the flange, we have left a 30-inch circle which is to be stayed by the braces. The area of this circle, in round num-

bers, is 707 square inches; and as it was proposed to carry 80 pounds steam pressure, the total pressure of the steam against the area to be stayed was $80 \times 707 = 56,560$ lbs. The sectional area of each of the braces was 1.56 square inches, so that, if we allow 7,500 lbs. as the safe working strain on the iron per inch of section, the safe working strain on each brace would be $1.56 \times 7,500 = 11,700$ lbs. It would be safer, therefore, to have five braces instead of four, or, better yet, to make the braces smaller and more numerous, so as to give the head more points of support. In the actual construction there was a circle on the head, 22 inches in diameter, that had no braces within it. This circle is indicated by the figures, though the engraver has shown it slightly out of proportion.

The most important point to be noticed, however, is, that the ends of the braces are secured by single rivets only, which are entirely inadequate to bear the stress that comes upon them with safety. A $\frac{3}{4}$-inch rivet has a sectional area of 0.442 sq. in., and if we allow it 7,500 lbs. of safe working strain per square inch, it will bear $7,500 \times 0.442 = 3,315$ lbs. Four such rivets will, therefore, safely bear $4 \times 3,315 = 13,260$ lbs., while, as we have seen, they are called upon in the construction shown in the cut, to carry a total load of 56,560 lbs., that is, they are loaded to over four times their safe working strain. We have assumed in this calculation, that if the rivets failed they would fail by pulling apart in the shank. In reality the heads would pull off before the shank parted, so that the bracing is even less secure than the foregoing calculation indicates.

The 15-inch hole cut in the boiler reduces the strength of the shell, and if high pressures were to be carried, it would be necessary to re-enforce it; but in consideration of the fact that 80 lbs. was the highest pressure it was proposed to carry, we did not consider it imperative that it should be re-enforced in this particular case.

The principal points about the dome we have illustrated this month, are, that in its original condition it was unsafe, and that it could have been made safe in the first place without much extra work, if the useless braces running from the shell of the dome to the boiler had been left off, and some extra ones had been put in to stay the top, in their stead. More rivets should be used in attaching the braces to the shell and head, and, (with our apologies to the advocates of the style of brace shown in the cut,) crow-foot braces would be much stronger and better. The "hinge" brace, as we call the kind here shown, must yield and straighten out at the angles before it can exert much holding power.

Inspectors' Reports.

APRIL, 1890.

During this month our inspectors made 4,334 inspection trips, visited 7,874 boilers, inspected 3,755 both internally and externally, and subjected 618 to hydrostatic pressure. The whole number of defects reported reached 7,732, of which 878 were considered dangerous; 39 boilers were regarded unsafe for further use. Our usual summary is given below:

Nature of Defects.	Whole Number.	Dangerous.
Cases of deposit of sediment,	432	50
Cases of incrustation and scale,	791	53
Cases of internal grooving,	79	17
Cases of internal corrosion,	244	21
Cases of external corrosion,	294	48
Broken and loose braces and stays,	127	35
Settings defective,	206	28

Nature of Defects.	Whole Number.	Dangerous.
Furnaces out of shape,	176	16
Fractured plates,	164	43
Burned plates,	151	30
Blistered plates,	225	9
Cases of defective riveting,	1,838	69
Defective heads,	66	37
Serious leakage around tube ends,	1,797	260
Serious leakage at seams,	385	27
Defective water-gauges,	85	32
Defective blow-offs,	80	29
Cases of deficiency of water,	17	14
Safety-valves overloaded,	22	6
Safety-valves defective in construction,	39	13
Pressure-gauges defective,	270	32
Boilers without pressure gauges,	3	3
Unclassified defects,	241	6
Total,	7,732	878

Boiler Explosions.

April, 1890.

Stave Mill (67). One of the boilers in a battery at the stave factory of J. H. Hussong & Co. of Hutsonville, Ill., exploded April 1st, doing much damage to the factory, killing one man outright, and fatally wounding three others, one of whom, J. H. Hussong, died a few hours afterwards. Two others were seriously wounded, and three or four others slightly. The other boiler in the battery was blown some distance, and the one that exploded was carried through one wing of the factory, demolishing the machinery and building.

Oil Well (68). On April 4th a boiler exploded at the Union Oil Co.'s well on the Stewart farm, at Hookstown, Beaver county, Pa. Ollie Peppard, a driller, and Ford M. Dawson, a tool-dresser, aged twenty-one, both of Georgetown, were at work. Peppard was in the derrick and escaped injury. Dawson was near the boiler, and was instantly killed. The boiler was blown to atoms.

Steel Works (69). An explosion occurred at the Allegheny Bessemer steel works in Duquesne, Pa., on April 10th, which was equal to the one that occurred a few months ago at the same place in everything but the loss of life. Two boilers out of a battery of eight went off at once, tearing the boiler-house from its foundation, and scattering bricks and missiles for acres around. Fortunately no one was in the boiler-house at the time, but some of the men who were working in the yard were struck and injured by the flying debris. The works were shut down for about a week.

Saw-Mill (70). A terrible accident occurred a few miles southeast of Gladwin, Mich., on April 14th. The boiler in Ozeman's saw-mill exploded, completely wrecking the mill and instantly killing H. M. Corey, the engineer, and Aaron Corey, his son, who was acting as fireman. The explosion was extremely violent, and its detonation was heard for miles around.

Portable Engine (71). Edward O'Connell, thirty-one years of age, an engineer employed in the work of double tracking the Shore Line road, was killed on April 16th, at a place called Giant's Neck, near Crescent Beach, two miles west of Niantic, Conn., by the explosion of a boiler.

LOCOMOTIVE (72). As the evening train on the Plainview branch of the Chicago & Northwestern railway was stopping at Viola on April 16th, the boiler of the locomotive exploded with great force. Fortunately the engineer escaped with a couple of light scratches, and the fireman, Gus Prevert, was not hurt at all. Ed. Kernan, the baggage man, was standing on the front platform of the baggage-car at the time, uncoupling the bell-rope. The concussion was so great as to produce a severe shock to his nervous system, and partially paralyze him. The explosion dug a hole five feet deep under the engine, and tore up the track for a distance of forty feet. Pieces of the boiler were found forty rods distant. The locomotive is described as being "entirely knocked out" between the top of the cab and the smoke arch. It was known as "Number Ten," and had been in use about twenty years. It was considered safe and in good condition.

IRON WORKS (73). An explosion occurred at the Ætna Iron Works, at Newcastle, Pa., on April 23d, two men being killed, and six badly injured, two of whom will probably die. All the men were working, when one end of the big boiler blew out, with a deafening roar, and in a moment the place was filled with scalding steam. A full half hour was lost before the injured men could be rescued, and the last dead body recovered. Those instantly killed were George Klingensmith and John Welsh. Another boiler burst in this same establishment a few days previously, but without disastrous results.

CREAMERY (74). A boiler in a creamery at Stanton, Neb., exploded on April 23d, causing considerable excitement but not much damage. The engine had just been started, when the boiler, which had not been used for a considerable time, burst, blowing one of its flues through a wall, and out into the yard. Nobody was hurt.

FIRE ENGINE HOUSE (75). A small boiler in the Number Two's engine-house, at Ninth Street and Freeman Avenue, Cincinnati, Ohio, exploded April 23d, fortunately injuring no one. It was an upright boiler, forty inches in diameter, and was used for keeping the water hot in the fire engine. About all the force of the company were out attending to the breaking in of a fractious horse. Over twenty feet of the flooring were torn up, window sashes and panes were demolished, and the stairway was badly wrecked.

BRICK YARD (76). The large boiler at Cook Brothers' tile and brick yards, six miles south of Flint, Mich., exploded on April 23d, with terrible effect. When the explosion occurred, several boys and men were standing about the engine-house. Fred Cook was scalded so badly that he died within two hours. The other victims were George Baldwin and Edward Purcell. Baldwin's injuries are so bad that his recovery is doubtful.

MACHINE SHOP (77). On April 26th, a boiler exploded in a machine-shop in South Hutchinson, Kansas. Five men and three little girls were in the engine-room at the time, but none of them were hurt. The boiler was thrown through the roof, passing through the corner of the main brick building, and landing a hundred feet away from its original place. Pieces of the engine and of the wrecked walls were scattered over a large area.

SAW-MILL (78). A boiler exploded on April 26th, in a saw-mill on East Seventh Street, Leadville, Col. The front head blew out. A piece of iron struck Mr. Albert Evans, knocking him down and fracturing his collar bone. Mr. Davis, who, in partnership with Evans, owned the mill, was slightly scalded, and a bystander received some bruises. The rear portion of Louis Kreppel's bakery, on one corner of Sixth and Alder streets, was partially demolished. The windows of the house were all broken, and the rear portion of the building looks as though it had been peppered by coarse shot.

Notes for The Locomotive.

By Samuel Nott, C. E.

In beginning this sequel to the writer's article, which appeared in the The Locomotive for November, 1888, a correction is in order, as the plank lattice bridge described in that issue should have been called the *Towne* lattice bridge instead of the *Burr* bridge, as it was inadvertently printed. In 1827, a chain suspension bridge was built over the Merrimack River at Newburyport, Mass., which is said to have cost $70,000. In 1840, the Eastern Railroad Company bought that bridge, removed it, and built on the piers and abutments a wooden truss bridge accommodating the common travel on the lower part, and the railroad travel on the top of the bridge. It had five spans — one of 189 feet, and one of 196 feet — length rarely exceeded by any kind of wooden bridge since built. The whole length of the bridge was about 910 feet. It was begun in the spring of 1840, and opened for both classes of travel, before the close of that year. During the building of the bridge, the common travel, which included the eastern stages, crossed the Merrimack on the picturesque Deer Island chain bridge, a few miles above Newburyport, which bridge is said to have been built in 1792. The railroad bridge of 1840, at Newburyport, was made to safely carry the constantly growing traffic, till it was superseded by the wooden Pratt truss bridge, built near and just above it, and opened in March, 1868; and this was in turn superseded, twenty years later, by the iron bridge now in use. The first daguerreotype pictures ever seen by the writer were some good specimens of the photographic art, made in 1840 by Dr. Kelly of Newburyport, an amateur operator, showing the picturesque chain bridge before it was removed, and the more useful, if not so picturesque, railroad bridge, which then took the place of the chain one.

The Salem Tunnel.

Looking back, the writer is impressed with the success achieved by the railroad engineers of fifty years ago, in doing a large amount of work in a short time, with slim facilities compared with those that have been available for many years past. One such case was the extension of the railroad referred to in The Locomotive for November, 1888. The Newburyport bridge of 1840, here referred to, is another case, and the Salem tunnel is still another, of much work done in a short time. The tunnel, about 650 feet in length, with the walled approaches making a granite work about a fourth of a mile in length, carried under one of the principal streets of the city, was begun and finished, and the street was restored to its original good condition, in less than nine months, in the year 1839. A Boston *Journal* representative, in the issue of that paper for February 11, 1888, reported the condition of the tunnel, as stated by one who remembered the building of it, as follows:

"There is no finer or stronger structure to be found anywhere than the Salem tunnel. It is most solidly built of massive stone. Nothing short of a South Carolina earthquake could disturb it. I do not believe that a comparison of the condition of the tunnel in 1839, the year it was built, and its present condition, would show that the whole structure had settled a quarter of an inch. That arch can never fall in, unless, as I say, we have a South Carolina earthquake. When the grade was lowered for the Pullman cars the railroad corporation put in an entirely new roadbed of rough stone, top-dressed with gravel. We took out then a large amount of sand and left the tunnel stronger and better than it ever was before. The roadbed is firmer to-day than it was in the first place. That arch will stand for a hundred years."

When the Salem tunnel was built, steam power was not employed at all in railroad building. Pile driving hammers were hoisted by the hand-power windlass,—all the piles were so driven for the original pile bridges of the railroads entering Boston. Nearly all the other heavy weights were hoisted by hand-power machinery, and animal

power was rarely used. For many years past steam power has been one of the greatest of the many new facilities for railroad building.

INSPECTORS' REPORTS.

Stationary steam power, which was but little used in New England fifty years ago, is now found everywhere, needing careful and systematic oversight, and when THE LOCOMOTIVE shows, as it does, that 18 per cent. of the reported defects of boilers in the year 1883, for instance, were dangerous, while the percentage of such cases in the year 1889 was only 8, we must conclude that the watch and ward of the Hartford Steam Boiler Inspection and Insurance Company over its risks is doing a valuable service in trying to "pluck out of this nettle, *danger* [steam], this flower, *safety*": and doing away with danger is one of the highest of the arts of life. The tabular statements, in THE LOCOMOTIVE, of reported defects, for the years above specified, when compared in details, show that in nearly all of the items there was a marked decrease in the percentages of the dangerous cases, but the only item we will here notice is that of defective riveting, showing 18 per cent. in 1883, and only 3 per cent. in 1889, a very striking exhibit truly, as to one of the main points in boilers.

Accidental Inventions Relating to the Steam Engine.

The steam-engine, which, taken as a whole, is the finest invention that the world has seen, owes much to accident. The Marquis of Worcester is said by one authority to have had his attention originally drawn to the subject of steam power, by the cover of a vessel filled with hot water having been blown off before his eyes while he was undergoing imprisonment in the Tower. Not very long afterwards, toward the latter part of the seventeenth century, Captain Savery, a gallant Englishman, was at Florence. He loitered in a tavern there one day, and, calling for a flask of wine, drank it off and then threw the empty bottle into the fire, in an absent, careless sort of way. Immediately afterwards a few drops of wine that had been left in the bottom of the bottle began to issue forth in steam, startling the Captain a little. He seized the bottle from the fire, and plunged it, neck downward, into a basin of cold water that happened to be at hand. The water rushed up into it, almost filling the flask. This set the Captain thinking, and his thinking set him experimenting, and in the year 1698 he took the first practical step toward the steam-engine by taking out a patent "for raising water and occasioning motion to all sorts of mill-work, by the impellent force of fire." Then followed the historic steam-engine of Thomas Newcomen, in the development of which accident again more than once came to the rescue. One day, in 1705, Newcomen and Crawley's engine was grinding away in its ponderous fashion, doing its work much as usual, its cylinder being cooled after each stroke by the application of water to the cylinder *outside*. Suddenly, without any apparent cause, the engine started off at an increased rate of speed that alarmed the engineers. Then it as suddenly stopped, and the proprietors exchanged looks of half-comic bewilderment. What could be the matter? They proceeded to make an investigation. The engine had darted off without any supply of water to the condensing jacket, and they found, on examining the piston, a hole through which the water — poured on it to keep it air-tight — had issued in the form of a jet and instantly condensed the steam within. From that time the water-jacket was no longer necessary; water was supplied to the interior of the cylinder by a pipe.

There was something of accident in the invention which Humphrey Potter, the lazy cock-boy, brought about at a subsequent period. The regulating and condensing valves had in those days to be shut and opened by a boy kept for that purpose. Humphrey, however, cared more for play than work, and one day, in order to escape

his task, and get away into the fields, he conceived the idea of connecting the levers which governed the cocks with the beams by a piece of string. This idea he carried into effect, and then off he scampered. His absence was discovered, and so was his ingenious contrivance. No doubt he was freely forgiven and promoted, though we do not hear anything of him afterwards. For once idleness had done a great service to mechanical science, the principle of Humphrey Potter's labor-saving invention being ever after adopted in the working of the steam-engine, which this improvement rendered completely automatic.

Then there was something almost accidental in the discovery by Watt, the greatest mind that coped with the steam problem, of the theory which he ultimately applied with such success. It was while walking on Glasgow Green one Sunday afternoon that the thought struck him that steam, being an elastic vapor, would expand and force itself into a previously exhausted place. He used to point with pride to the exact spot where this happy inspiration occurred.—*Romance of Invention.*

The New Quarters of the Society of Mechanical Engineers.

The following circular has been issued by Mr. F. R. Hutton, who is secretary of the American Society of Mechanical Engineers: —

AMERICAN SOCIETY OF MECHANICAL ENGINEERS.
HOUSE OF THE SOCIETY, No. 12 WEST 31st STREET,
NEW YORK CITY, May 8, 1890.

DEAR SIR: — On this day at noon there has passed into the possession of trustees, the title deeds for the house and lot at No. 12 West 31st Street in this city, which will be hereafter the permanent home of the library and offices of this society. Notice is hereby given to all the members of the society, and allied organizations, of this change of address, and all communications should hereafter be sent to the society's house as above. The society will occupy the parlor at the right of the entrance as its business office and members' rendezvous, and the library will be on the second floor. This second floor has been fitted up by its former owners as a library area and has a capacity for 20,000 volumes. As the present library of the society numbers less than 2,000 volumes, it will be seen that there is room for abundant growth. The second story small front room will be the secretary's private office. The third story rear room will be used as a room for photographs, drawings, and collections of models and apparatus, and in this room, with a sunny southern exposure, a drawing table will be kept, together with the usual instruments, for the use of non-resident members who may find such an outfit convenient when in the city. Incandescent electric lights are to be put into the building throughout, which will add very much to the comfort of every one, particularly of readers at night and in warm weather. Back of the entry and parlor-office on the ground floor is an auditorium, two stories in height, with seating capacity for over 200, electrically lighted, and ventilated by mechanical means. This auditorium to be re-decorated, and new and more comfortable seats are to be put into it. The telephone service will be provided as heretofore, for the convenience of the members. The house is twenty-eight feet four inches wide, and is 175 feet west of Fifth Avenue. Elevated railroad stations are at 28th and 33d Streets on the Sixth Avenue line, and at 28th and 34th Streets on the Third Avenue. Stage and car lines on Fifth Avenue and Broadway are close at hand, for up and down town. The Grand Hotel is on the corner of Broadway and 31st Street, and the Gilsey, Leland, San Carlo, and other hotels are very near. The house of the Engineers' Club is directly in the rear on 29th Street.

The house and lot cost $60,000. Of this sum, $33,000 is left on bond and mortgage by its former owners, and the balance was subscribed for and loaned by interested members of this society. Considerably more has been subscribed than is actually needed, although not enough to clear off the mortgage entire. The council congratulates the members on the fact that at so early a period in its history the society should have been able to undertake successfully so signal a step of progress and prosperity as to be able to arrange for permanent quarters in so eligible a location and in a house so admirably adapted for present and future need.

Address hereafter, F. R. HUTTON, Secretary,
No. 12 West 31st Street.

The Locomotive.

HARTFORD, JUNE 15, 1890.

J. M. ALLEN, *Editor.* A. D. RISTEEN, *Associate Editor.*

THE LOCOMOTIVE *can be obtained free by calling at any of the company's agencies.*
Subscription price 50 cents per year when mailed from this office.
Bound volumes one dollar each.

Papers that borrow cuts from us will do us a favor if they will plainly mark them in returning, so that we may give proper credit on our books.

WE desire to acknowledge the receipt of a copy of Mr. Countryman's *Illustrated Sketch of the Guardians of the Peace and Property of Hartford, Conn.* It contains a history of the police department from the earliest days down to the present time, giving portraits of some of the better-known officials. Following this is a history of the fire department, with numerous portraits of the officers and commissioners, and a series of cuts of the various engines. Altogether, the pamphlet is very creditable and interesting.

THE fifteenth report of the *Märkischer Verein zur Prüfung und Ueberwachung von Dampfkesseln in Frankfurt a. d. O.* is at hand. An extract from this report is given elsewhere in this issue. We have also received the nineteenth *Geschäfts-Bericht des Schlesischen Vereins zur Ueberwachung von Dampfkesseln*, and the twentieth *Jahresbericht des Norddeutschen Vereins zur Ueberwachung von Dampfkesseln in Hamburg*, both of which contain useful statistics and other information.

WE have received from Joseph Baer & Co., of Frankfort, Germany, a catalogue of scarce and valuable books on North and South America, a part of which are from the library of the late James Carson Brevoort, of Brooklyn. Nearly all languages are represented in the catalogue, and lovers of books — particularly of books relating to the history of the western world — will find many valuable things in it. We may add that Baer & Co's stock includes, in all, over 300,000 volumes.

PROFESSOR R. H. THURSTON's latest book, a copy of which has kindly been sent us by Messrs. John Wiley & Sons, of 53 East Tenth Street, New York, is one of the most interesting works we have seen for many a day. It relates entirely to the labors of the eminent French engineer, Sadi Carnot, of whom the present president of the French Republic is a grand-nephew. A review of Carnot's work begins the volume, and a history of his life, written by Henri Carnot, his brother, follows. Then comes a translation of the historical essay entitled *Réflexions sur la puissance motrice du feu*, which is of the greatest interest. Next in order comes Sir William Thomson's paper on *Carnot's Theory of the Motive Power of Heat*, taken with the author's permission from the *Transactions of the Royal Society of Edinburgh* for 1849. The book closes with an appendix containing extracts from Carnot's unpublished writings.

There are a few passages in Dr. Thurston's essay on *The Work of Sadi Carnot* that are given in French, as they were originally written. It seems to us that the book would have been a little more satisfactory to those who do not understand French, if translations had been appended. It is true that these passages are rendered into Eng-

lish in the body of the work, but there are no cross references to assist the reader. The passage on p. 10 may be rendered thus: "It may therefore be stated, as a general fact, that the motive power in Nature is an unvarying quantity; that it is never, properly speaking, either created or destroyed. It is true that it changes its form,—that is to say, that it produces sometimes one sort of motion and sometimes another; but it is never lost." The passage on p. 11 is the second paragraph of Carnot's essay, for which see p. 37. (We should, however, translate "la chut des pluies et des autres météores" as "the fall of rain, snow, and hail," instead of "the fall of rain and of meteors.") The first three lines of French on p. 12 are rendered by the italics on p. 51. The lines at the end of the paragraph on p. 12 are translated by the italics on p. 55. The five lines beginning at the bottom of p. 12 will be found in italics on p. 68, and the six lines following will be found, also in italics, on p. 72. The three lines near the bottom of p. 13 are on p. 76, those on p. 15 are on p. 97, those on p. 16 are at the bottom of p. 114 and the top of p. 115, and the long passage on p. 18 constitutes the closing paragraph of the essay, and is to be found on p. 126.

It is as a historical contribution that the book under discussion is to be considered. As the publishers say, "The work itself has been long out of date as a scientific authority, even had it ever held such a position;" and they add that "the book is published as matter of limited but most intense scientific interest, and on that score only."

Not long ago there was an extensive fall of meteorites out west, and scientific men have been anxious to secure specimens of them, and willing to pay pretty fair prices. We learn, now, that some of our enterprising fellow-citizens who live in the vicinity of the fall have taken advantage of this demand, and are manufacturing meteorites in considerable quantities. Of course it would be impossible to palm off bogus ones on people who know anything about such things, but there are many who know little or nothing about them, and who wish them merely as curios. These amateur collectors are easy victims.

Great is the power of American ingenuity!

Obstinate nose-bleeding, says *Science*, is frequently one of the most difficult things to check. Several aggravated cases have lately occurred at the Hospital of the University of Pennsylvania. As a last resort, Dr. D. Hayes Agnew tried ham-fat with great success. Two large cylinders of bacon were forced well into the nostrils, and the hemorrhage ceased at once. This is a very simple remedy, and one which should be remembered for cases of emergency in the country.

Queen's Ferry—The Forth Bridge.

By Samuel Nott, C. E.

In *Engineering* for February 28th last, and in the London *Times* of March 4th, there are interesting articles on the Forth Bridge, at Queen's Ferry, near Edinburgh, Scotland, and a brief reference to that ancient ferry-way and the bridge may be interesting to the readers of the Locomotive. It appears that the Scots have been troubled from early times for the want of a bridge at Queen's Ferry. King Alexander the first, of Scotland, about the time of the Norman conquest attempted to cross, and a gale drove him five miles away, on to the island of Inchcolm, where he afterwards built a Priory, as a devout thank-offering for his deliverance. The slim facilities for crossing the ferry, near the end of the eighteenth century, are graphically indicated by Scott,

in the first chapter of the Antiquary, wherein Monkbarns appears irate over the delay at Edinburgh of the Queen's Ferry Diligence, or Hawes Fly, lest it would not be in time to save the tide for crossing, and Mrs. Macleuchar tries to buy him off, by the return of the carriage fare received from him, saying, "O man! O Man! take back your three shillings and make me quit, O, ye." "Not so fast, not so fast, woman," says Monkbarns, "will three shillings transport me to Queen's Ferry, agreeably to thy treacherous programme? or will it requite the damage I may sustain by leaving my business undone? or repay the expenses which I must disburse, if I am obliged to tarry a day at the south ferry for lack of tide? Will it hire, I say, a pinnace, for which alone the regular price is five shillings?" As all the readers of the Antiquary know, Monkbarns finally had his three-shilling ride, in the Hawes Fly, and we will leave him, set down at his inn, at the south side of the ferry, and pass on to say, that the difficulties of crossing to the north side of the forth, which were encountered by him and King Alexander, and the generations before and since, have been overcome by the lately-completed Forth bridge which reduces the distance by railway from Edinburgh to Dundee about thirty-five miles. It is not the purpose here to give even an abstract of the quoted articles. Those persons who are interested in engineering details must study the articles themselves. The main features of the bridge are these: The whole length, including the approach viaducts, is one mile and 1,005 yards. The length of the cantilever portion is 5,350 feet, or 944 feet more than the height of Ben Nevis. The length of the great cantilever is 1,630 feet, that of the smaller ones is 1,510 feet. The two great spans measure 1,710 feet each, being 114½ feet more than the central span of the Brooklyn bridge — the longest other span in the world. The deepest foundation below high water is ninety-one feet. The highest part of the bridge above high water is 361 feet. The greatest depth of water in the north channel is 218 feet, and in the south channel, 197 feet. The average weight of the masonry in each of the main piers is 18,000 tons. The weight of steel used in the entire bridge is 51,000 tons. The greatest number of men employed at any one time was 5,000. The number of lives lost during the seven years' time of building the bridge was fifty-six. The whole cost was considerably greater than the original estimated cost, which was £1,600,000. The Forth bridge is not a beautiful structure compared with the Brooklyn bridge, "which," as the London *Times* says, in closing its article quoted, "is a graceful and well-proportioned erection. Nevertheless, if regard be had to conditions of strength and stability, to the adaptation of means to ends, to the massiveness of the whole, and to the symmetry of the parts, it will be universally admitted that there are few human structures, if any, that surpass the Forth bridge in impressiveness and stately grandeur."

Steam Boiler Inspection in Germany.

Our readers may be interested in the following extract from the fifteenth annual report of the *Märkischer Verein zur Prüfung und Überwachung von Dampfkesseln in Frankfurt*, which indicates what the association undertakes to do for its members, and what its charges are. In translating the charges into American money, we have counted the German "mark" as equal to twenty-five cents.

RATES OF CHARGES TO THE MEMBERS OF THE *Märkischer Verein*.

A. Members are entitled, each year, to:

(1) Two semi-annual inspections, at least one of which, in every two years, must be an internal inspection.

(2) In conformity to law one of the internal inspections must be accompanied by a hydrostatic test, at least as often as once in six years.

(3) Consultations at the association's headquarters, and also advice by letter,

provided this does not call for a marked sacrifice in time to the officials of the association.

(4) Sketches and drawings to elucidate points that cannot well be made clear without them.

(5) Inspection of machinery situated in the establishments of the members, provided this can be done at the date of the inspector's visit to the boilers, and without serious loss of time.

B. A Charge of $2.25 will be Made for the Following:

(1) Each inspection in addition to the two regular semi-annual ones previously mentioned. Charge will also be made, in such cases, for the inspector's traveling expenses.

(2) Each extra hydrostatic test of a boiler. The inspector's traveling expenses will likewise be charged in these cases. For each additional water test, after the first, on the same day and at the same place, only $1.50 will be charged.

C. Five dollars a day, in addition to traveling expenses, will be charged for all extra work done for members by an Association inspector. This includes the making of pyrometer tests, the giving of expert advice, etc. For expert work with the indicator or upon efficiency trials, special rates will be charged, depending, in each case, on the nature and extent of the operations.

D. Three dollars and seventy-five cents will be charged for each design for a boiler-setting.

Traveling Expenses.

(1) Expenses incurred in making the regular inspections, etc., mentioned under section A are paid by the central office of the Association.

(2) Expenses in work mentioned under B and C will be reckoned as follows:

(*a*) For railroad journeys, a round-trip ticket (second class).

(*b*) For journeys by road, only the actual expense of stage or carriage.

(*c*) Meals at $1.50 a day.

Work described under sections C and D can be undertaken only when the time at our disposal allows.

It will be seen that the *Märkischer Verein* does not *insure* boilers, but merely inspects them and reports upon their condition. The same is true of the other German associations.

Mr. James Nasymth.

On the 9th of May Mr. James Nasymth, the well-known inventor of the steam hammer, died at Kensington, England, at the age of eighty-one years. In addition to his mechanical work, he was a devoted student of astronomy, using a telescope of his own manufacture; and, together with Mr. James Carpenter, he wrote an excellent treatise on "*The Moon considered as a Planet, a World, and a Satellite.*" His biography was written by Dr. Smiles, and in 1883 he published an autobiography. *Engineering* (London) gives a brief review of his life in a recent issue, as follows: "James Nasmyth was the youngest son of Mr. Alexander Nasmyth, the eminent landscape painter, who in addition to his high artistic powers, was an excellent amateur mechanic. In his little workshop the son was early devoted to those mechanical pursuits which he afterwards followed. Amongst the frequent visitors to his father were Patrick Miller, of Dalswinton, Professor Leslie, and other scientific men of high standing. James was sent to the high school at Edinburgh, where he had for a school companion the son of an iron founder, in whose works he used to spend his spare hours, watching the various processes that were going on. By the time he was fifteen he had become a very fair workman, and made a small steam engine which he set to grind colors for his father. In those days model steam engines

were comparatively rare, and James Nasmyth found that the manufacture of them and of sectional models for illustrating lectures afforded him employment that was both interesting and profitable, and which enabled him to buy admission tickets to the lectures on natural philosophy and chemistry delivered in the University of Edinburgh. In 1827 and 1828 Mr. Nasmyth constructed a steam carriage capable of carrying eight persons. This was completed at the expense of 60 pounds ($300), and was run for two months, when it was disposed of. The engine was afterwards used for driving a factory. . . . . After working for Mr. Henry Maudslay and Mr. Joshua Field as draughtsman, Nasmyth went to Manchester, and in June, 1834, he rented a flat in an old mill and commenced business for himself. His business soon outgrew his accommodations, and he was obliged to move elsewhere. It was then that he established the Bridgewater Foundry at Patricroft. Shortly after locating here he made the first sketch of his steam hammer. It arose from an inquiry for special tools for the construction of the engines of the *Great Britain*. The engines had been commenced when a difficulty arose in making the paddle-shaft, which was of dimensions far exceeding anything known at the time. None of the engineering firms in the country would undertake to forge it, and Mr. Humphries, the designer, wrote to Mr. Nasmyth, informing him of the facts, and asking him if he thought cast-iron could be used. By return mail Nasmyth sent him a sketch of the steam hammer by which he proposed to forge the paddle shaft, the arrangement of the hammer, thus hastily designed, being the same as that in use at present. Unfortunately the design of the engines was changed, and screw engines were adopted, and consequently the necessity for the hammer was temporarily postponed. The value of the idea was first recognized in France. No secret was made of the invention, and when, during the absence of Mr. Nasmyth, M. Schneider, of Creusôt, called with M. Bourdon at Patricroft, Mr. Gaskell showed him his partner's 'scheme book,' which contained the design of the steam hammer. M. Bourdon made a note of the arrangement, and on his return to France he made use of it. Nasmyth knew nothing of this until April, 1840, when he made a visit to Creusôt, and a steam hammer in full work and made from his own design was shown to him. On his return to England he applied for a patent, and in a few weeks the first hammer, with a 30-hundred weight head, was in operation at Patricroft. In 1845 Nasmyth applied the steam hammer to driving piles. Among other inventions of his we may mention, the 'Nasmyth steam arm' (a shaping machine), a circular cutter for cutting gear wheels, a double-faced wedge sluice valve, a reversible rolling-mill, and a spherical-seated safety-valve."

On the New Method of Exploding Boilers.

Numerous items have appeared in the daily papers with reference to a recently discovered cause of boiler explosions, and we have been asked to give our opinion concerning this alleged cause. As nearly as we can learn, Mr. Fowler took a small copper boiler with a long nipple at one end, partly filled it with water, and placed it over a lamp. When the pressure had reached 40 lbs. he removed the boiler from the lamp, shook it up well, and inverted it. The pressure rose at once to 80 lbs. He did the same thing with a larger boiler, except that the initial pressure was 80 lbs., and the final pressure 180 lbs.

It is claimed that the rise in pressure so produced is due to the presence of gases in the boiler. To prove this an opening is left in the boiler until steam blows through it freely. The opening is then closed and the boiler shaken and inverted, when it is found that the pressure does not rise as before.

There is no doubt but that the facts are as stated above. We have repeated the experiments many times ourselves. The explanation, however, is not hard to find.

When the boiler is first heated it contains a considerable amount of air, which the lamp does not warm to any considerable degree, most of the heat being absorbed by the water. When the boiler is shaken up the hot water mingles with the air, heats it, causes it to expand, and raises the pressure. In fact, the exact amount by which the pressure will be raised may be readily calculated.

It will be seen that the shaking up of the boiler is a necessary factor in the experiment; and as people do not usually shake up big boilers very much, there is little likelihood of an accident occurring in practice from this cause. Moreover, it should be remembered that getting up steam, in actual practice, is a slow operation: so that whatever air there is in the boiler has ample opportunity to become heated to the same temperature as the water; and when it has become heated to this temperature, any amount of shaking up could not raise the pressure a single pound.

Mr. Fowler's experiment is interesting, but it need give our readers no apprehension.

Two Extraordinary Stars.

Professor Edward C. Pickering, director of the Harvard College Observatory, has recently made some very interesting discoveries in the heavens. Two stars, that look like single bodies, even in the most powerful telescope, have been proven to be, in reality, double. No one has ever seen the two components of either star individually, and it appears that they never can be so seen until we can make telescopes vastly larger than any now in use.

The stars in question are known to astronomers as *Beta Aurigæ* and *Zeta Ursæ Majoris*. The former is one of the stars in the Waterman, and the latter is situated at the bend in the handle of the Great Dipper. On clear nights the one in the Great Dipper can be seen to be double by the unaided eye, if one has good sight, one of the components being much fainter than the other. The telescope shows that the brighter of these components is, in itself, a double star; and the spectroscope, in the hands of Professor Pickering, now shows that one of the components of this telescopically double star is also double.

The principle upon which this discovery is based is not hard to understand. As an illustration of it, let us consider the case of a locomotive that is approaching us with a velocity of, say, 100 feet a second. Suppose the pitch of the tone given out by the bell when the train is not moving is *C*, the number of vibrations per second corresponding thereto being 64. We are standing beside the track, let us say, and the engineer strikes the bell when the engine is 110 feet away from us, the position of engine and observer being as follows:

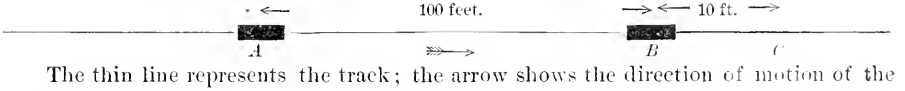

The thin line represents the track; the arrow shows the direction of motion of the train; *C* is the position of the observer; *A* is where the engine is when the bell is struck; and *B* is where the engine is at the end of one second. The time of day when the engine is at *A*, we will say, is 10 h. 0 min. 0.00 sec.; so that the time of day when it reaches *B* is 10 h. 0 min. 1.00 sec. While the engine passes from *A* to *B*, the bell, we have supposed, makes 64 vibrations. Now, since sound travels at the rate of 1,100 feet a second, we should not hear the bell at the instant it is struck, because the sound has to travel 110 feet before reaching us, which will take it $\frac{1}{10}$ of a second. We shall not hear the bell, therefore, until $\frac{1}{10}$ of a second after it is struck — that is, not until 10 h. 0 min. 0.100 sec. The bell makes its sixty-fourth vibration as it reaches *B* — that is, at 10 h. 0 min 1.00 sec.; but we do not hear it until $\frac{1}{110}$ of a second later, since it takes sound that length of time to travel 10 feet. The fraction $\frac{1}{110}$, when reduced to a deci-

mal, is equal to about .009; so that we hear the sixty-fourth vibration of the bell 0.009 of a second later than 10 h. 0 min. 1 sec. (which is the time the engine arrives at *B*); that is, we hear it at 10 h. 0 min. 1.009 sec.

Summing up these calculations, we find that we should hear the first vibration of the bell at 10 h. 0 min. 0.100 sec., and the sixty-fourth vibration at 10 h. 0 min. 1.009 sec. The difference between these times is 0.909 of a second; so that, although the bell on the engine makes sixty-four vibrations in a whole second, we hear these sixty-four vibrations in 0.909 of a second. At this rate, in a whole second we should receive 70.4 vibrations (.909 : 1.0 :: 64 : 70.4). That is, the sound we should hear would have a higher pitch than the one actually given out by the bell, in the proportion of 70.4 to 64. A similar calculation shows that after the engine had passed us the apparent tone of the bell will be lower than the real tone in the proportion of 64 to 58.2. That is, if the tone of the bell is, in reality, the *C* that is two octaves below what musicians call "fundamental *C*," the tone that we should hear when the train is approaching us with a speed of 100 feet a second would be almost half way between *D* and *D*♭; and when the train is going away from us the apparent tone would be very close to *B*♭. The difference ought, therefore, to be quite perceptible to the ear, and it is so. If any one will take the trouble to stand beside the track as a swiftly-moving train passes along, he will notice a very marked drop in pitch between the stroke of the bell just before the engine reaches him and the next one just after it has passed.

The object of the foregoing explanation is to show that it would be possible, by working the problem backwards, for a musician to tell how fast the train is moving, by observing the pitch of the bell when the train is approaching, and again when it is receding.

Now, although light travels many times faster than sound, it is of essentially the same nature: that is, sound is a succession of waves in the air, and light is a succession of waves in the ether, that wonderful substance that seems to fill all space. It must be true, then, that, if a star is approaching us, the "pitch" of its light must be higher than it would be if the star were still. In other words, every tint in its light must look to us more bluish than it is in reality. Similarly, if a star is moving away from us, each tint must look more reddish to us than it is in reality. But, since light travels about 186,000 miles in a second, this shifting in the tints is exceedingly slight, and can be detected only with the finest instruments. In fact, it would be quite impossible to detect it at all, were it not for the fact that certain tints in the light that we get from the stars are missing, so that when this light is split up into its component colors by means of a prism, we find delicate black lines are seen running across the spectrum. These lines are caused by the fact that the star in question does not emit any light that has the particular shade of color corresponding to their positions in the spectrum. If thousands of colored threads were laid side by side, each one differing in color from its neighbors by an almost inappreciable shade, one end of the row being red and the other end violet, and the intermediate colors being orange, yellow, green, blue, and indigo, the appearance of the whole will be similar to that of the spectrum given by a white-hot body. Now, if threads are withdrawn, here and there, so as to leave dark spaces or gaps in the band of color, a very fair representation of the spectrum of the stars may be had.

The absence of these tints enables us to judge whether any particular star is approaching us or receding from us; for, if the star is approaching, the "pitch" of every tint — missing ones and all — will be raised, the same as the pitch of the engine bell was raised; that is, every one of the black lines will be shifted slightly towards the violet end of the spectrum. If the star is receding from us, the dark lines will all be shifted the other way — *i. e.*, towards the red end. In Professor Pickering's two

stars, one of the sharpest-defined lines was chosen for examination. This line is known to be caused, in some manner or other, by the presence of hydrogen gas in the star; and we can tell precisely the position the line would have if the star were still. By measuring the amount by which this line is shifted toward the violet or the red, we can tell how fast the star is approaching or receding. The most accurate way of doing this appears to be by photography, and Dr. Vogel, of Potsdam, Germany,* has recently obtained some very fine photographs of the spectra of stars, from which he finds the following:

Star.	Velocity in Miles per Second.	Direction of Motion.
a Aurigæ,	16.0	Receding.
a Tauri,	29.8	"
a Ursæ Minoris,	26.1	Approaching.
a Persei,	7.1	"
a Canis Minoris,	7.1	"

These results are the best, perhaps, that ever have been attained. The ten measurements from which the velocity of the first star in the table was obtained were (in German miles) 3.5, 3.6, 3.4, 3.2, 3.7, 3.1, 3.2, 3.3, 4.0, and 3.8. The agreement among the separate results is certainly far better than anything else we have seen in this line.

But to return to Professor Pickering's work. In a photograph of the spectrum of β Aurigæ, taken some time ago, it was noticed that the dark lines were all double. Nothing was thought of it then, as it was supposed that some instrumental error was the cause; but recent investigations have shown that on every other day the lines are all double, and that on the intermediate days they are single. This most extraordinary fact cannot be the result of accident, nor of errors in the instruments used. The only possible explanation is that the star, which is apparently single, even in the largest telescopes, is in reality double, and that the components revolve about one another once in about four days. Then, when the line joining the two stars is at right angles to the line of sight, one of them will be approaching us, and the other receding from us. The lines in the spectrum of one star will, therefore, be shifted toward the violet, and those in the other toward the red. Hence, we should not expect the lines in the two spectra to be superposed upon one another, but to show separately, side by side, the distance between them depending on the sum of the velocities of the component stars. By measuring the separation of the lines, Professor Pickering has found that it corresponds to a velocity of 150 miles a second. Supposing one star to revolve about the other with a velocity of 150 miles a second, we find that in four days it would travel 51,840,000 miles; that is, the circumference of its orbit is about 51,840,000 miles. The diameter of a circle having this circumference is 16,500,000 miles; and the distance that the components are apart is half of this, or 8,250,000 miles, the distance from the earth to the sun being 95,000,000 miles.

Further calculations are being made, and the Professor hopes to be able, shortly, to give us, with great precision, the elements of this wonderful star-system, which the eye of man has never yet been able to see except as one infinitesimal speck of light on the heavens. The period of revolution of β Aurigæ is already known to within three or four seconds, but a much closer determination than this will be forthcoming shortly. In conclusion, we beg to say that we have seen one of the photographs of the spectrum of this star, and that it is a most magnificent thing. By the aid of a magnifying glass, the lines may be seen to be distinctly double on the original negative, and the distance between them can be determined by a microscope with great precision.

If only poor old Galileo, with his telescope of lead pipe and spectacle lenses, could come back, how he would rejoice to see the marvelous and almost incredible advances in astronomy that have been made since he was laid away to rest!

*Astronomische Nachrichten, No. 2,896-7.

Incorporated 1866.

Charter Perpetual.

Issues Policies of Insurance after a Careful Inspection of the Boilers,

COVERING ALL LOSS OR DAMAGE TO

BOILERS, BUILDINGS, AND MACHINERY.

ALSO COVERING

LOSS OF LIFE AND ACCIDENT TO PERSONS

ARISING FROM

Steam Boiler Explosions.

Full information concerning the plan of the Company's operations can be obtained at the

COMPANY'S OFFICE, HARTFORD, CONN.,

Or at any Agency.

J. M. ALLEN, President. W. B. FRANKLIN, Vice-Prest.
J. B. PIERCE, Secretary. FRANCIS B. ALLEN, 2d Vice-Prest.
E. J. MURPHY, M. E., Consulting Engineer.

Board of Directors.

J. M. ALLEN, President.
FRANK W. CHENEY, Treas. Cheney Brothers Silk Manufacturing Co.
CHARLES M. BEACH, of Beach & Co.
DANIEL PHILLIPS, of Adams Express Co.
RICHARD W. H. JARVIS, Prest. Colt's Fire Arms Manufacturing Co.
THOMAS O. ENDERS, President of the U. S. Bank.
LEVERETT BRAINARD, of The Case, Lockwood & Brainard Co.
GEN. WM. B. FRANKLIN, U. S. Commissioner to the Paris Exposition.
NEWTON CASE, of The Case, Lockwood & Brainard Co.
NELSON HOLLISTER, of State Bank, Hartford.
HON. HENRY C. ROBINSON, Attorney-at-Law, Hartford.
HON. FRANCIS B. COOLEY, of the National Exchange Bank, Hartford, Conn.
A. W. JILLSON, late Vice-Prest. Phœnix Fire Ins. Co., Hartford, Conn.
EDMUND A. STEDMAN, Treasurer of the Fidelity Co., of Hartford, Conn.
CLAPP SPOONER, Bridgeport, Conn.
GEORGE BURNHAM, Baldwin Locomotive Works, Philadelphia.
HON. NATHANIEL SHIPMAN, Judge United States Circuit Court.

A. S. Ferry, General Agent, Office at Hartford, Conn.

GENERAL AGENTS.	CHIEF INSPECTORS.	OFFICES.	
THEO. H. BABCOCK.	R. K. McMURRAY,	NEW YORK CITY.	Office, 285 Broadway.
CORBIN & GOODRICH.	WM. G. PIKE.	PHILADELPHIA.	" 430 Walnut St.
LAWFORD & McKIM,	JOSEPH CRAGG,	BALTIMORE, Md.	" 22 So. Holliday St.
C. E. ROBERTS,	WM. U. FAIRBAIRN,	BOSTON, MASS.	" 35 Pemberton Sq.
		PROVIDENCE, R. I.	" 29 Weybosset St.
H. D. P. BIGELOW,	H. D. P. BIGELOW,	CHICAGO, ILL.	" 112 Quincy St.
C. C. GARDINER,		ST. LOUIS, MO.	" 404 Market St.
L. B. PERKINS.	F. S. ALLEN.	HARTFORD.	" 218 Main St.
W. G. LINEBURGH & SON,	J. H. RANDALL.	BRIDGEPORT.	" Franklin Block.
GEO. P. BURWELL.	C. A. BURWELL.	CLEVELAND.	" 208 Superior St.
MANN & WILSON.	J. B. WARNER,	SAN FRANCISCO.	" 306 Sansome St.
ZOLLARS & McGREW,	T. E. SHEARS,	DENVER, COL.	" Granite Building.
LEITH & SHOBER,	B. F. JOHNSON,	BIRMINGHAM, ALA.	"
W. S. HASTIE & SON,		CHARLESTON, S. C.	" 44 Broad St.

The Locomotive.

PUBLISHED BY THE HARTFORD STEAM BOILER INSPECTION AND INSURANCE COMPANY.

NEW SERIES—VOL. XI. HARTFORD, CONN., JULY, 1890. No. 7

On the Design of Domes.

In our last issue we called attention to a faulty arrangement of braces in a steam dome. A much better arrangement is shown in the accompanying cut.

In previous issues of the LOCOMOTIVE, we have given our reasons for preferring the ordinary plain tubular boiler to boilers with domes. (See the LOCOMOTIVE for 1881, pp. 48 and 75; for March, 1883, p. 49; and for July, 1886, p. 106.) The reasons advanced

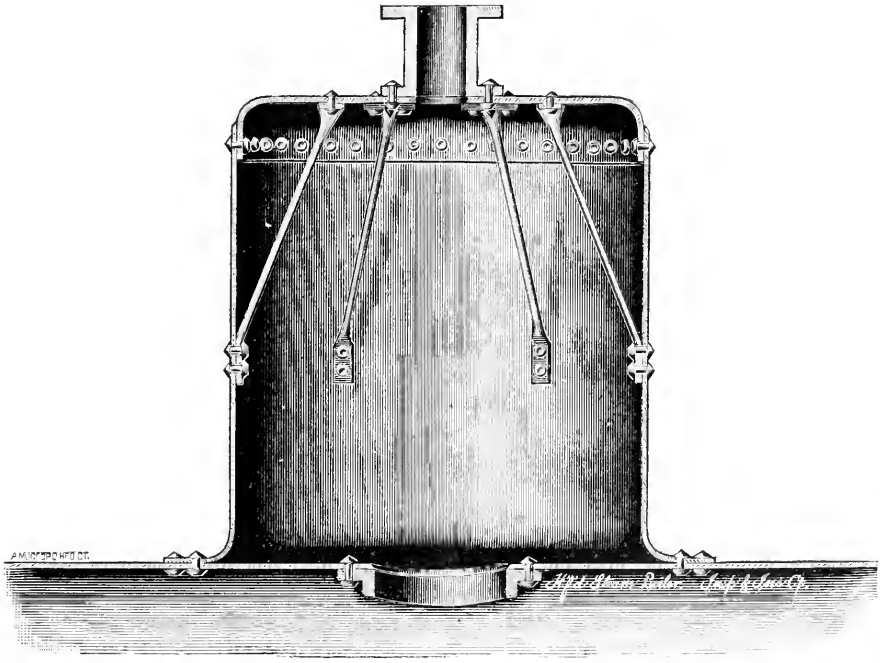

A CORRECTLY DESIGNED DOME.

in favor of domes are, that they afford a considerable amount of storage room, so that sudden drafts of steam produce less variations in pressure than they otherwise would; and that they materially lessen the quantity of water carried over by the steam into the mains. So far as the first reason is concerned, we may say that we consider it better to dispense with the dome and use a somewhat larger boiler to gain the steam space; and so far as the second reason is concerned, it may be well to reflect that boilers do not foam or prime to any extent if they are properly designed and supplied with suitable

feed water. Nevertheless, many engineers advocate the use of domes, and a large percentage of boilers have them.

Many boiler-makers cut out the shell the full size of the dome, but this is very objectionable, since it removes such a large portion of metal that the boiler is materially weakened. Others cut out only enough of the shell to allow steam to enter the dome freely, say a six or eight-inch circle. While this method of construction is stronger than the preceding, and therefore to be preferred to it, it has the serious objection that the interior of the dome is not accessible for inspection or repairs. The proper way, in our estimation, is to cut out an opening large enough for a man to pass through, and to rivet an iron frame to this opening exactly as in making a man-hole. This method is illustrated in the cut, and it seems to be quite free from objection.

The necessary strength and stiffness in the shell may also be preserved by riveting two bars of tee-iron to the outside of the shell, one on each side of the opening, giving them the same curve as the boiler, and extending them crossways of the boiler until the ends almost touch the sides of the dome. This stiffens the shell admirably, and while the man-hole frame is equally good and probably better for a new boiler, the tee-irons may be more readily applied to an old boiler which shows distress around the dome.

We do not recommend putting a man-hole in the top of the drum, as is often done. The steam-pipe and safety-valve connections should go there, and the man-hole should be placed elsewhere on the boiler.

The bracing of the head is to be taken carefully into account, as well as the opening in the boiler shell. In a 30-inch dome, allowing 3 inches all around as sufficiently stiffened by the flange, there are 707 square inches to be braced. Under a pressure of 100 lbs. to the square inch this would correspond to a total pressure on the head of 70,700 lbs.; and this, allowing 7,000 lbs. to each brace, would call for ten braces. Now, although ten braces appear to be required by theory, practice shows that such a large number is not necessary. To explain this disagreement we must consider the real object of the bracing, which is, to stiffen the head so that the steam pressure will not cause it to become convex, and tear itself out around the flanges. The riveted joint, by which the head is attached to the shell of the dome, is abundantly strong enough to stand the entire pressure on the head, provided the head is kept flat so that the strain on the rivets is a simple shear.

It is the practice among boiler-makers to use thicker material in the head than elsewhere, the difference being say $\frac{1}{8}$ of an inch. This increases the stiffness to a considerable extent. Again, riveted to the middle of the head of the dome is a steam nozzle, the flange of which acts as an admirable stiffener to the part of the head immediately around it, and aids materially in preventing the convexity that the steam pressure tends to produce. Taking these facts into account, we can understand how it is that experience has proven that six braces arranged around a circle are sufficient, they being arranged so as to cover the head as well as possible. Crow-foot braces should be used, as shown in the cut, and the rivets used in securing them should not be less than $\frac{3}{4}$ of an inch in diameter.

Although a single row of rivets is sufficient around the upper end of the dome, where the strain is all of the nature of a shear, the lower flange should be double riveted since the strain on the rivets at this point is tensile, and tends to strip off the heads.

To free the dome from water that would otherwise collect between it and the sides of the boiler shell, we recommend that a number of small holes be made in the shell of the boiler at the point where the dome comes furthest down the side. We also recommend that wrought-iron heads be used on domes, in every instance. Our experience has been such that we cannot recommend cast-iron in any case.

Inspectors' Reports.

MAY, 1890.

During this month our inspectors made 6,013 inspection trips, visited 11,217 boilers, inspected 4,626 both internally and externally, and subjected 662 to hydrostatic pressure. The whole number of defects reported reached 11,708, of which 936 were considered dangerous; 33 boilers were regarded unsafe for further use. Our usual summary is given below:

Nature of Defects.	Whole Number.	Dangerous
Cases of deposit of sediment,	920	37
Cases of incrustation and scale,	1,392	38
Cases of internal grooving,	80	5
Cases of internal corrosion,	511	25
Cases of external corrosion,	1,251	56
Broken and loose braces and stays,	146	34
Settings defective,	428	48
Furnaces out of shape,	576	31
Fractured plates,	161	41
Burned plates,	206	14
Blistered plates,	419	35
Cases of defective riveting,	1,878	31
Defective heads,	188	43
Serious leakage around tube ends,	1,825	269
Serious leakage at seams,	458	27
Defective water-gauges,	313	44
Defective blow-offs,	158	26
Cases of deficiency of water,	21	11
Safety-valves overloaded,	73	28
Safety-valves defective in construction,	68	20
Pressure-gauges defective,	415	41
Boilers without pressure-gauges,	25	25
Unclassified defects,	196	7
Total,	11,708	936

Boiler Explosions.

MAY, 1890.

FACTORY (79). A boiler in the factory of Messrs. Clark & Cowles, Plainville, Conn., exploded on May 5th. Little damage was done, and no one was injured.

COLLIERY (80). One of a nest of three boilers at Trenton Colliery, Mahanoy City, Pa., exploded on May 7th, damaging and throwing the two others out of place. Considerable injury was done to the building, but no one was hurt.

LOCOMOTIVE (81). As a freight train on the Atchison road was crossing a bridge near Wellington, Kan., on May 7th, the boiler of the locomotive exploded. Engineer Mack was scalded to death and the fireman fatally injured. The explosion destroyed the bridge, and sixteen cars of cattle were precipitated into the creek. The loss will be considerable.

SAW-MILL (82). On May 8th, a boiler exploded in a saw-mill at Dexter Station, Ark., fragments of the shell being hurled through the air to a distance of 300 feet from the building. One man was killed, and several others were severely scalded.

TUG-BOAT (83). On May 9th, an attempt was made to dislodge the wrecked steamer *Howell*, at Shreveport, La. The snagboat *Wagner* exploded her boiler while at work, but the explosion did but little damage, and injured nobody.

LOCOMOTIVE (84). On May 11th, Lehigh Valley engine No. 261, George Pearl, engineer, and Henry J. O'Connor, fireman, left Buffalo, N. Y., for East Buffalo, with a string of twenty-seven cars. The train was moving slowly, and had crossed the Lake Shore track at the Buffalo Creek junction when the locomotive exploded. It was entirely demolished and considerable damage was done to the track. Both Pearl and O'Connor were killed.

HOTEL (85). Early on the morning of May 13th, the boiler in the kitchen of Hemphill's European hotel, Nashville, Tenn., exploded with terrific force. The boiler was blown seventy-five feet, and wrecked a room through which it passed. Henry Douglas, a colored waiter, was killed, and Alexander Works, a colored cook, was injured.

LOCOMOTIVE (86). The boiler of a locomotive on the Reading railroad exploded on May 13th, at Paxinos, a small village six miles northwest of Shamokin, Pa., killing Engineer Hoglemon and Fireman Charles Kaufman, and probably fatally injuring Conductor George C. Yeager.

SAW-MILL (87). Horace Miller was killed and G. F. Achison and Wesley Bell seriously injured, on May 15th, by an explosion in a saw-mill located twelve miles from Kirkville, Mo. Horace Miller owned the mill.

SAW-MILL (88). The boiler in the steam saw-mill of Kerr Bros., Farran's Point, Aultsville, Ont., exploded on May 15th, completely demolishing the mill and killing a young man by the name of Rombough, who was at work on the outside. The explosion occurred at an opportune moment, as the men had not yet gone to work, and the engineer had returned to breakfast, after having started the fire. Parts of the boiler were lodged upon Croil's Island, half a mile distant. One huge piece of iron, weighing at least 300 or 400 pounds, was carried over the village and deposited in the road, near Subbs' marble shop. Another, about the same size, was carried over John Farrer's house, and crashed through the roof of a shed in the rear. It is a matter for congratulation that the explosion did not occur a few minutes later, else the loss of life would have been great. Young Rombough was killed almost instantly, a piece of iron striking him across the chest.

MACHINE SHOP (89). The boiler in the machine shop of Atzbaush & Berry, Iron City, Tenn., exploded on May 15th. No one was injured.

DWELLING-HOUSE (90). The boiler attached to the range in ex-Councilman Hunt's house, Trenton, N. J., exploded on May 17th. The damage was not great.

SAW-MILL (91). A steam boiler in Cobb's saw-mill, about four miles south of Woodhull, near Canisteo, N. Y., exploded on May 22d. The fireman, George Stryke, age about forty-five, received injuries from which he died shortly afterward. Barney Gee was injured internally, and his shoulder and right side were badly bruised. Menzo Waldrick was severely hurt, and two others were injured slightly. The boiler was blown twenty-five rods into an adjoining field.

COLLIERY (92). On May 26th, a nest of three boilers exploded in the Edgerton Coal Company's engine-house, at Jermyn, near Pittston, Pa., one of the boilers being

blown a distance of 400 feet. Fortunately, there were but few persons in the vicinity at the time, else the loss of life would have been great. An account of the explosion given in a local paper says that "Engineer Jones had a most exciting experience. He was in the boiler-room at the time, and was driven head foremost through the roof and into the air for the distance of about fifty feet. He landed on the hillside adjoining with a few slight bruises, but the escaping steam caught him and burned him quite severely." We should think this experience might be exciting.

Saw-Mill (93). At Buckhannon, Upshur County, W. Va., the boiler of a large saw-mill belonging to William Means, exploded on May 27th with tremendous force, tearing a large section of the roof and wall out. Russell Hyre was hurled through the side of the mill, and was found 200 feet away. Floyd Wilson was fatally scalded and mangled by flying débris. C. B. Brake had one arm broken and received other injuries which make his recovery doubtful, and three others were severely, but not fatally, hurt.

Canning Works (94). On May 30th, the boiler in the Canning Works, at Vreeland, N. Y., exploded. Three men were killed, and five of the employees injured.

The French steamer *Ville de Tangier* exploded her boilers at Marseilles, France, on May 17th. Three men were killed and four badly injured, and much damage was done to the vessel.

On Meteors.

The meteor that fell in Winnebago County, Iowa, on May 2d, has attracted a good deal of attention. Some five hundred pieces of it have been found, ranging in weight from 66 pounds to one-twentieth of an ounce. Mr. George F. Kunz of New York, has secured over three hundred of the fragments for his collection. On one broken surface there is a thin layer of what appears to be black lead, but otherwise the constitution of the fragments appears to be similar to that of several other meteors,—particularly to the one which fell at Parnallee, India, in 1857,—except that the present fall is quite porous. Professor Newton has given the elements of the orbit in which the body moved before striking the earth, in the *Scientific American* for June 21st; though from the nature of the problem these cannot be considered very trustworthy.

The word metor, according to Scheler, comes from the Greek *μετέωρος*, and means, literally, "that which is in the air; atmospheric." It thus applies to storms, winds, halos, and other like phenomena, as well as to bodies falling into the earth's atmosphere from outer space. In the common use of the word, however, only the latter class of things is meant. Meteors, in this sense of the word, are often called shooting stars, falling stars, bolides, or aërolites.

Professor Newton gives a very good description of the phenomena attending the fall of one of the best known meteors that have fallen in this country in recent years: "On the evening of the 2d of December, 1876," he says, "persons in or near the State of Kansas saw, about eight o'clock in the evening, a bright fire-ball rising from near where the moon then was in the western sky. It increased in brilliancy as it proceeded, becoming so bright as to compel the attention of every one who was out of doors. To persons in the northern part of the State the meteor crossed the southern sky going to the east, to those in the southern part it crossed the northern heavens. To all it went down near to the horizon a little to the north of east, the whole flight as they saw it occupying not over a minute. The same meteor was seen to pass in nearly the same way

across the heavens, from west-southwest to east-northeast by inhabitants of the States of Nebraska, Iowa, Missouri, Wisconsin, Illinois, Michigan, Kentucky, Indiana, Ohio, Pennsylvania, and West Virginia. But besides this there were heard near the meteor's path, four or five minutes after its passage, loud explosions like distant cannonading, or thunder, or like the rattling of empty wagons over stony roads. So loud were these that people and animals were frightened. East of the Mississippi River these explosions were heard everywhere within about 60 miles of the meteor's path; and in Bloomington, Indiana, sounds were heard supposed to come from the meteor even from a distance of nearly 150 miles from it. Over central Illinois it was seen to break into fragments like a rocket, and over Indiana and Ohio it formed a flock or cluster of meteors computed to be forty miles long and five miles broad. The sky in New York state was wholly overcast. Persons in Ohio and Pennsylvania, who from their situation could look over the cloud last, saw the meteor passing on eastward over New York. From many places in the State itself came accounts of rattling of houses, thundering noises, and other like phenomena, which at the time were attributed to an earthquake. At one place in northern Indiana a farmer heard a heavy thud, as of an object striking the ground near his house. The next morning he found on the snow a stone of very peculiar appearance weighing three-quarters of a pound, which from its character there is every reason to believe came from the meteor. By putting together the various accounts of observers, the meteor is shown to have become first visible when it was near the northwest corner of the Indian Territory, at an elevation of between sixty and one hundred miles above the earth. From here it went nearly parallel to the earth's surface, and nearly in a right line, to a point over central New York. During the latter part of its course its height was 30 or 40 miles. It thus traversed the upper regions of the air through 25° of longitude and 5° of latitude in a period of time not easily determined, but probably about two minutes. A part of the body may have passed on out of the atmosphere, but probably the remnants came somewhere to the ground in New York, or farther east."

Meteors as large as the one here described are very rare, but smaller ones are falling almost continually. Six or eight meteors a year, on an average, reach the earth's surface, and come into the hands of collectors. Probably six or seven hundred meteors reach the earth's surface in a year, but are never found. Anyone who takes the trouble to watch for them can see many smaller ones in a single night. Some of these are very bright, while others are so faint that "though you look directly at the meteor, you doubt whether you see one or not." It is very likely that as many as twenty million shooting stars, visible to the naked eye, enter the earth's atmosphere in a single day, almost all of which are so small as to be entirely consumed by the fierce heat engendered by their friction with the air; and if we add to this the number visible in the telescope, the total would probably be twenty-fold greater.

It has been estimated, from a careful study of the subject, that if the meteors in space near the earth's orbit are distributed with tolerable uniformity, it is only about 250 miles from one to another of those large enough to be visible to the naked eye.

Careful observation has developed some very striking facts about the motion of the meteors in space, before they encounter the earth. For instance, there are records of remarkable showers of meteors, the first of which that we have any definite mention of, occurred on Oct. 13th, in the year 902 A. D. From that time until the present we have records of great showers on the following dates: Oct. 13, 902; Oct. 15, 931; Oct. 14, 934; Oct. 15, 1002; Oct. 17, 1101; Oct. 19, 1202; Oct. 23, 1366; Oct. 25, 1533; Oct. 28, 1602; Nov. 9, 1698; Nov. 12, 1799; Nov. 13, 1832; Nov. 13, 1833; Nov. 14, 1866; Nov. 14, 1867; and Nov. 14, 1868. The brilliancy and unusual character of the displays on these dates may be inferred from references that exist in various writings still extant. "So-called flaming stars struck one against another violently while being borne

eastward and westward, northward and southward, and no one could bear to look toward the heavens on account of this phenomenon." "Stars shot hither and thither in the heavens, eastward and westward, and flew against one another like a scattering storm of locusts, to the right and left; people were thrown into consternation, and cried to God the Most High with confused clamor." "The phenomenon was grand and awful; the whole heavens appeared as if illuminated with sky rockets." "Thick with streams of rolling fire; scarcely a place in the firmament that was not filled at every instant."

By a comparison of the dates of the most marked showers, it appears that they have a regular period of 33.27 years. It is also observed that all the shooting stars belonging to this system come from the same point in the heavens, which is near the center of the sickle in the constellation *Leo*. That is, they do not all become visible at this point and radiate in all directions, but if the apparent paths of all be traced backward they all meet at the place mentioned. This fact gives us a means of ascertaining the direction in which the meteors were moving before they encountered the earth, and enables us to calculate the orbit in which they move in space. *This orbit is found to be practically identical with the orbit of Tempel's comet;* from which we infer that there is an intimate connection of some kind between comets and meteors.

But the most interesting thing about meteors is their chemical composition. Here we have masses of matter hurled down upon the earth from the depths of space, coming from we know not where. With what interest, then, does the chemist approach them! They might be composed of substances quite unknown to us here in this world, and undreamed of in our philosophies. Analysis, however, shows that these visitors from space are built up of the same elements that we know here. Iron, magnesium, silicon, oxygen, nickel, cobalt, chromium, manganese, titanium, tin, copper, aluminium, potassium, sodium, calcium, arsenic, phosphorus, nitrogen, sulphur, chlorine, carbon, hydrogen, lithium, and antimony, have already been found in them, and, so far as we are aware, no new element has been discovered. Several minerals occur in meteorites, however, that are not found native on the earth. Among these are phosphide of iron and nickel, sesquisulphide of chromium and iron, sulphide of calcium, and chloride of iron. Carbon in a graphitic form is often found, and in a few instances "carbon appears not as graphite, but in union with hydrogen and oxygen, and also with soluble and even deliquescent saline matters." This naturally suggests the possibility of finding organic remains in the meteors, either animal or vegetable; but though they have been sought for with the utmost care, it does not appear that any have yet been discovered. A few years ago an article appeared in the *Popular Science Monthly* giving particulars of the discovery of minute, microscopic fossils in some of them; but it appears from later investigations that these were probably natural formations, and not fossils. Still, it is difficult to conceive of the formation of hydrocarbons in the mineral world, without the intervention of animals or plants. Such substances are essentially organic in nature, and it may be permissible, perhaps, to consider that their existence proves that the meteors came from some place where organic life once existed.

Mr. Henry H. Bates, of Washington, D. C., calls attention to the erroneous estimate that people in general have of the apparent size of the sun. On a good hot day in summer one would be quite willing to admit that it would take at least a half-dollar, held at arm's length, to cover the solar disk. In reality, a buckshot a quarter of an inch in diameter is quite sufficient, as may be verified by trying the experiment on the moon, which has almost precisely the same apparent diameter as the sun.

The Locomotive.

HARTFORD, JULY 15, 1890.

J. M. ALLEN, *Editor.* A. D. RISTEEN, *Associate Editor.*

THE LOCOMOTIVE *can be obtained free by calling at any of the company's agencies.*
Subscription price 50 *cents per year when mailed from this office.*
Bound volumes one dollar each.

Papers that borrow cuts from us will do us a favor if they will plainly mark them in returning, so that we may give proper credit on our books.

WE have received a neat little circular from the Eddy Manufacturing Co., of Windsor, Conn., setting forth the merits of the electric motor made by them. The use of such motors is steadily growing, and it is a wonder to us it does not grow faster, now that electric light mains pass through so many of our streets.

AN interesting feature of the explosion of the *Medora*, mentioned elsewhere in connection with the death of Mr. Joseph Cragg, was, that Mr. Cragg testified that to his personal knowledge, the steam-guage indicated only 23 lbs. a few minutes before the explosion occurred. Boilers of the same type now carry 100 lbs. with safety, the difference being due, no doubt, to improvements in the system of bracing. This, we believe, was Mr. Cragg's opinion, as he considered his employer and preceptor, Watchman, to be a very excellent and thorough mechanic for his time.

SOMEBODY has thoughtfully sent us a copy of a Welsh newspaper, presumably for perusal and editorial comment. We are very grateful to the gentleman, though his kindness has cost us many hours of sleep that would otherwise have been refreshing. The fact is, we have read it through faithfully, and have vainly sought in it for words of comfort. There are none. We presume, however, that it has a head and tail, though we can't find them. In one place we read that "Dyoddefais am flynyddau oddiwrth boenau dychrynllyd yn yr yswigen a'r elwlod, a rhoddais brawf, teg ar bob moddion a ddarparai y meddygon i mi, ond i nemawr o bwrpas." Now, whoever is Bob Moddion?

Next time, dear unknown correspondent, give us something harder. Try us on Prákrit or Zulu or Arabic.

Cats.

The following extracts from the Report of the Commissioner of Insurance of the State of Kansas make very spicy reading, and are applicable to the methods employed in some other States. The whole report will repay a careful reading. It shows that the way of the transgressor is hard.

"'It has been the Providence of Nature,' saith the Brahmin Pilpay, speaking of the original cat, 'to give to this creature nine lives instead of one.' This record was made in the very dawn and infancy of cats. If the history of cats in this series of reports seems somewhat long, repetitious and tiresome, the indulgent reader will bear in mind this ancient saw relative to feline longevity, and will brace up when he remembers

that although a bogus insurance company has as many lives as a cat, yet it liveth not forever. It may and surely will die when the nine lives are ended.

"The insurance crook is a very sharp man ; he knows every trick of the trade."

"The Crook dresses well and makes a favorable impression. He selects his town, and makes the acquaintance of influential men ; ropes them into his company for enough to get a charter and organization; but the company consists of these new comers, and one or two crooks. They secure the insurance, lie to the department, and pocket the cash receipts. The honest directors, whose names have been used to secure business, having no control whatever over the company, keep dropping out. The annual meetings are held by the crooks. They elect the officers ; they fix their own salaries. Now, they have things just as they want them. In their advertising they continue to use the names of good men as their directors ; these are also displayed before the Legislature when the crooks are buying votes."

Mr. Joseph Cragg.

It is our unpleasant duty to announce the death, on June 2d, of Mr. Joseph Cragg, a much-esteemed man, who has been for sixteen years the chief inspector in the Baltimore department of the Hartford Steam Boiler Inspection and Insurance Company. Mr. Cragg was born in Grantham, Nottinghamshire, England, on July 3, 1814, but came to Baltimore with his parents in 1818. While a lad, he was apprenticed to the firm of Watchman & Bratt, machinists in Baltimore, with whom he served his time. He subsequently worked at the trade of machinist until 1848. During this time, in the year 1842, while working for Watchman & Bratt, he was one of the men employed by that firm in fitting up the ill-fated steamer *Medora*. The boiler exploded while the vessel was on its trial trip, and 27 men were killed and 40 injured. Mr. Cragg was thrown some distance into the water, but swam ashore. In 1848, he engaged as a marine engineer, and for several years run on steamers between Baltimore and Norfolk and Fredericksburg. Afterwards, for some years, he was superintending engineer of the Norfolk County Ferry. In 1861, Mr. Cragg was appointed United States Inspector of steamboats at Baltimore, an appointment which he held until 1870, when he became an inspector for this company. He leaves a wife, two sons, and two daughters.

Sunday Inspections.

We wish to say something about Sunday inspections once more, and as we do not see that we can add anything to the editorial in the issue of the Locomotive for July, 1884, we republish it below :

"We have on several occasions called the attention of our patrons and readers to the importance of dispensing with work on the Sabbath, and especially would we urge upon steam-users and manufacturers in general that the observance of the Sabbath is a duty which is morally binding upon all. The custom of making repairs and improvements on the Sabbath is, in our opinion, a loss in the end. It cannot be a serious interruption to any business to give a few days every year to the necessary overhauling and repairing of the machinery or motive power of a mill. If men are required to work on the Sabbath, the influence will be demoralizing. They will not have the same respect for any law as they otherwise would, nor will they, in our opinion, have the same respect for their employers' interests. The whole practice is wrong, and contrary to the instincts of those even who have no religious convictions. Obedience to law is the strong

bulwark to the happiness and peace of any community, and the moral law is the foundation of all civil law.

"We are led to write upon this subject from the fact that many steam-users ask us to send inspectors to inspect their boilers on Sunday, and in many cases these requests come from persons who would be quite unwilling to have it generally known that they asked for men to work on their boilers on the Sabbath. The fact that it is not generally known does not change the character of the disposition to make arrangements for it. One or two days in the year will be all that is necessary for inspecting the boilers of most establishments, and we earnestly urge upon all steam-users to arrange for some week day for this work. We believe they will lose nothing in the end. In many, a great many, instances the proprietors of manufacturing establishments will have no work done on their premises on the Sabbath. We wish it might be so with all.

"In the matter of inspections, we arrange for holidays, Saturday nights, and Monday mornings, and are willing to do anything in our power to avoid Sunday work. It is unjust to inspectors to ask or require Sunday work of them. It is unjust to their families, and particularly to their children, and it is not good for any community nor for any leading man or men in a community to arrange for having work done on the Sabbath, when it can be just as well done on any other day. Work of necessity is different, and there would be no difference of opinion on that point. But be careful not to magnify a mercenary feeling into a necessity."

On the Carburization of Iron by the Diamond.

An interesting paper under this title was recently read before the Iron and Steel Institute of Great Britain by Professor W. C. Roberts-Austen, F. R. S. The paper is of more theoretical than practical interest, but since it gives a number of facts relating to the history of the discovery of the nature of steel, which could not be found elsewhere without a deal of research, we publish it below:

"That the presence of carbon determines the physical properties of iron is universally recognized. It is, however, a singular fact that the mass of recent work, both theoretical and practical, which has clearly shown the importance of the presence in iron of elements other than carbon, and has enabled the nature of their action to be defined, has in no way lowered the position which carbon holds as the element which confers upon iron the wide range of properties characteristic of steel. It is also strange that, notwithstanding the wealth of literature which relates to the history of the extraction of iron from its ores and its conversion into steel, but little has been written with reference to the historical experiments by which the true nature of steel, as distinguished from iron, was established.

"I do not propose to do more than briefly allude to the writings of what may be called the critical period of the history of theoretical views concerning the constitution of steel. The period was a brief one, as it only extended over the seven years that intervened between 1774 and 1781. In 1774, Rinman showed that a drop of nitric acid simply whitens wrought-iron, but leaves a black mark on steel; while in 1781, Bergman* clearly stated that steel mainly differs from iron by containing $\frac{2}{10}$ per cent. of carbon, while iron does not. The great professor at the University of Upsala was, as I have elsewhere shown,† not only one of the earliest workers in the field of thermo-chemistry, but a believer in the polymorphic nature of iron. The history of the metallurgy of iron at the end of the eighteenth century is, in fact, an epitome of the history of chemistry at that period. Bergman tenaciously held to the phlogistic theory in relation to steel; it was in-

* De Analysi Terri Opuscula Physica et Chemica, vol. iii, 1783.

† "On the Hardening and Tempering of Steel," *Nature*, November 7-14, 1889.

evitable that he should. The true nature of oxidation had been explained by the school of Lavoisier; no wonder that the defenders of the phlogistic theory should seek to support their case by appealing to the subtle and obscure changes produced in iron by apparently slight causes. Bergman's view was, however, combated by Vaudermonde, Berthollet, and Monge,* who showed, in a report communicated to the Academie des Sciences in 1786, that the difference between the main varieties of iron is determined by variation in the amount of carbon, and further, that steel must contain a certain quantity of carbon in order that it might possess definite qualities.

"Bearing in mind the nature of Black's work, it was only natural that he, writing in 1796,† should have attributed the hardening of steel to the "extraction of latent heat," "the abatement of the hardness by temper being due," he says, "to the restoration of a part of that heat." Osmond in the last few years has shown that such evolution and absorption of heat is the thermal evidence of molecular change in iron, which lends additional interest to the observations of Black; but to return to the period at which he wrote, it is quite evident that the great English chemist did not see that the work of Bergman had entirely changed the situation, and even we are apt to forget how necessary it was at the time to establish the fact that carbon is really the element which gives to steel its characteristic properties.

"With this object in view, Clouet in 1798 melted a little crucible of iron weighing 57.8 grammes containing a diamond weighing 0.907 gramme, and obtained a fused mass of steel. Guyton de Morveau†† reported upon this classical experiment, which was repeated by many observers in this country, none of whose results were free from the doubt which arose from the fact that furnace gases could always obtain access to the iron, and might, as well as the diamond, have yielded carbon to the metal. The question, however, of the direct carburization of iron by the diamond has never been really questioned since 1815, when a working cutler, Mr. Pepys,‡ employed the electric current to heat iron wire and diamond dust together, and obtained steel. Nevertheless, as his experiment was performed in air, the possibility of the formation of a gas containing carbon was not entirely eliminated. The question whether the presence of gas as well as of solid carbon is really necessary to effect carburization seems to have had singular attraction for experimenters. Margueritte,§ for instance, in 1865 repeated Clouet's experiment, and showed that, although carburization can be effected by simple contact of carbon and iron in a gaseous atmosphere, it is nevertheless true that in the ordinary process of cementation the gas carbonic oxide plays an important part, which had until then been overlooked.

"Graham‖ insisted upon this fact in his classical paper on the "Occlusion of Gases by Metals," in which he described the discovery of the occlusion of carbonic oxide by iron.

"The journal of this Institute for 1885¶ contained a reference to the interesting experiments of Hempel** who found that the diamond form of carbon unites more readily with iron than either the graphitic or the amorphous form. He employed pure colorless diamonds, which had previously been heated in an atmosphere of nitrogen, and one result of this experiment was to show that solid carbon does not carburize iron at a tem-

* Histoire de l'Academie Royal des Sciences, 1786 (printed 1788), page 132.
† Lectures on the Elements of Chemistry, vol. ii. (1803), page 505.
†† Ann. de Chim., xxxi. (1799), page 328.
‡ Phil. Trans. Roy. Soc., 1866, pages 399–439.
§ Ann. Chim. et Phys., t. vi. (4), 1865.
‖ Phil. Trans. Roy. Soc., 1866, pages 399–439.
¶ Journal Iron and Steel Institute, 1885, page 298.
** Ber. der deutsch-chem. Gesellschaft, vol. xviii., page 998.

perature below a red heat, provided the carbon and iron be heated in an atmosphere of nitrogen perfectly free from oxygen.

"It has, however, been asserted that nitrogen is a powerful agent in the conversion of iron into steel, and for reasons which cannot be dealt with here, I am inclined to think that it is so. But the question as to carburization was reduced by Hempel's experiments to very narrow limits, and I determined to repeat Clouet's experiments, using a vacuum instead of an atmosphere of gas. The form of the apparatus used renders it possible not only to use the electric current for heating pure electrolytic iron in vacuo in the presence of diamond, but to heat the iron itself in vacuo before contact with the diamond is effected, and thus to deprive the iron of its occluded gas.

"I am satisfied that combination of iron and diamond does not take place until a full red heat is reached, which agrees with Hempel's statement as regards the experiments conducted in an atmosphere of nitrogen. It would, however, be well to repeat my experiment, making accurate thermal measurements by the aid of Le Chatelier's pyrometer.

"It may be pointed out that these simple experiments derive their theoretical interest mainly from the assertion that no two elements can react on each other unless a third element or substance be present. It would appear, however, that a mere "trace" of such additional element is sufficient to insure combination; for in the experiments I have described, carbon and iron, in their purest obtainable forms, were used, and the only additional matter which could have been present was the trace of occluded gas which the iron may have retained.

"It is safe, therefore, to conclude that carbon can combine with iron in vacuo at a full red heat. I have thought it well to bring this fact forward at the present time, for we have seen, from M. Osmond's paper, that, after more than a century of research, carbon still retains its place as the chief element which modifies the properties of iron. The interest in its action is now more intimately connected with the molecular changes in the iron which it is capable of producing than with its own direct association with the metal."

The Use of Dangerous Boilers.

Under this head our esteemed English contemporary, *Engineering*, gives an account of recent investigations made by the British Board of Trade on two boiler explosions, at Crosby and Halifax respectively, which is of considerable interest. The explosion at Halifax, says *Engineering*, occurred from a small and insignificant boiler, which is credited, however, with a remarkable history. "It was of the flat-ended, externally fired type, measuring only 3 ft. 9 in. in length by 1 ft. 10 in. in diameter. The back end plate was blown out, owing to its having been weakened by external corrosion. One life was lost, and several children playing near were injured. The owners were two young mechanics, one an engineer's apprentice [*i. e.*, machinist] and the other just out of his time. It appears that they bought the boiler, along with a small engine, a few months ago to drive a couple of lathes in their spare time. The price paid for the lot was thirty shillings. No examination whatever was made before or after purchase, and the boiler was set to work at a supposed pressure of 65 lbs., though it appears that owing to an error in calculation the true pressure was 85 lbs. Both the owners stated to the commissioners that they had no practical knowledge of boilers, but understood when they bought the one in question, that it had been worked at 60 lbs., and therefore they thought they would be right in working at 65 lbs. It was stated in evidence by the father of one of the owners that several boilermakers had assured him that it would be

safe at 60 lbs., while one enthusiastic admirer went so far as to volunteer to 'sit on it with steam at a pressure of 80 lbs.' The boiler worked occasionally till March 8th, when it burst at a pressure of 78 lbs., with the serious consequences narrated above.

"The person who sold the boiler deposed to having purchased it from a man named Burroughes some time previously, 'and that he gave for it an old watch and five shillings in cash,' representing a total payment of forty-five shillings. A vertical engine and some steam pipes were thrown in with the boiler in the bargain. Burroughes 'struck it with a heavy hammer and looked as if he struck hard,' but that was all the inspection the boiler received. Burroughes in his turn stated before the commissioners that he bought the boiler as 'he was having a walk one Sunday morning nearly three years ago,' and that the price he paid was twenty-three shillings. He did not even know from whom he purchased it. After working it now and then at 60 lbs., he discontinued its use as it burnt too much coal.

"It would have been interesting had the career of this so-called 'boiler' been traced further back still, but it is hidden from view. We do not know how often it had changed hands previously, but we do know that it was bought for twenty-three shillings, then that it was sold for an old watch and five shillings, and resold for thirty shillings. The idea of examination, or of learning whether the boiler was fit for work, never seems to have occurred to any of the parties connected with the transactions, although the last purchasers were two young men who had been for some years engaged in mechanical pursuits.

"The commissioners in this case did not order payment of costs, the boiler being used for amusement and instruction rather than for profit, but they stated that very great blame attached to the owners and to the man who sold them the boiler. They issued a general warning to steam-users, and said that in the event of future explosions under similar circumstances they would be liable to the public and might be indicted for manslaughter should life be lost, a conclusion totally at variance with the opinion of the coroner and the verdict of the jury returned the previous day, when the explosion at Halifax was pronounced to be 'an unforeseen and unfortunate catastrophe, for which no one was to blame.'"

The candle singed the moth that time, sure. Mankind seems to have the idea that a small boiler cannot do much damage, anyhow; yet the fact is, that small boilers like this one are often highly dangerous, from the fact that, being small, they seldom receive the care that larger ones get.

Ice-making in the Tropics.

Sometime ago an interesting article on this subject appeared in *Nature*, the greater part of which was reproduced by Prof. Tyndall in his *Contributions to Molecular Physics in the Domain of Radiant Heat*. The present scarcity of ice and the consequent diversion of public attention to ice-making lends a new interest to this article, which we give below. Tyndall remarks, in connection with it, that "the care taken to secure local dryness is very manifest. The ground is first dried by the sun, and the straw which covers the ground and on which the dishes rest, is also carefully kept dry. A glance at the map of India will explain the efficacy of the N.N.W. wind and the hindrance offered by the southerly and easterly winds to the formation of ice. In the former case the air not only crosses the hills mentioned by Mr. Wise (the author of the article), but, in all probability, has rolled over the Himalayas from Thibet; in the latter case it comes from the adjacent ocean. The thermometric difference between 48°, the temperature of the air a yard above the straw-beds, and 27°, the temperature of the beds themselves, is greater than I had supposed it to be. It is also interesting to know that the wind which

resists the formation of ice is often colder than the one which favors it." It is perhaps unnecessary to say that the cause of the freezing is the rapid absorption of heat by the water as its evaporates in the dry air coming from the mountain regions. A pint of water, in evaporating, absorbs enough heat to form about nine pounds of ice. The southerly and easterly winds do not form ice for the reason that they are already charged with vapor from the ocean, and are incapable of taking up enough more vapor to cool the water in the dishes to the necessary point. The method of freezing described by Mr. Wise is employed by the natives of Bengal for making ice at the town of Hooghly near Calcutta, in fields freely exposed to the sky, and formed of a black loam soil upon a substratum of sand.

"The natives commence their preparations by marking out a rectangular piece of ground 120 feet long by 20 broad, in an easterly and westerly direction, from which the soil is removed to the depth of two feet. This excavation is smoothed, and *is allowed to remain exposed to the sun to dry*, when rice straw in small sheaves is laid in an oblique direction in the hollow, with loose straw upon the top, to the depth of a foot and a half, leaving its surface half a foot below that of the ground. Numerous beds of this kind are formed, with narrow pathways between them, in which large earthen water-jars are sunk in the ground for the convenience of having water near, to fill the shallow unglazed earthen vessels in which it is to be frozen. These dishes are 9 inches in diameter at the top, diminishing to $4\frac{3}{10}$ inches at the bottom, $1\frac{3}{10}$ deep, and $\frac{3}{10}$ of an inch in thickness; and are so porous as to become moist throughout when water is put into them.

"During the day the loose straw in the beds above the sheaves is occasionally turned up, *so that the whole may be kept dry*, and the water-jars between the beds are filled with soft pure water from the neighboring pools. Towards evening the shallow earthen dishes are arranged in rows upon the straw, and by means of small earthen pots, tied to the extremities of long bamboo rods, each is filled about a third with water. The quantity, however, varies according to the expectation of ice — which is known by the clearness of the sky, and steadiness with which the wind blows from the N.N.W. When favorable, about eight ounces of water is put into each dish, and when less is expected, from two to four ounces is the usual quantity; but, in all cases, more water is put into the dishes nearest the western end of the beds, as the sun first falls on that part, and the ice is thus more easily removed, from its solution being quicker. There are about 4,590 plates in each of the beds last made, and if we allow five ounces for each dish, which presents a surface of about 4 inches square, there will be an aggregate of 239 gallons, and a surface of 1,530 square feet of water in each bed.

"In the cold season, when the temperature of the air at the ice-fields is under 50° F., and there are gentle airs from the northern and western direction, ice forms in the course of the night in each of the shallow dishes. Persons are stationed to observe when a small film appears upon the water in the dishes, when the contents of several are mixed together, and thrown over the other dishes. This operation increases the congealing process, as a state of calmness has been discovered by the natives to diminish the quantity of ice produced. When the sky is quite clear, with gentle steady airs from the N.N.W., which proceed from the hills of considerable elevation near Bheerboom, about 100 miles from Hooghly, the freezing commences before or about midnight, and continues to advance until morning, when the thickest ice is formed. I have seen it seven-tenths of an inch in thickness, and in a very few favorable nights the whole of the water is frozen, when it is called by the natives solid ice. When it commences to congeal between two and three o'clock in the morning, thinner ice is expected, called paper-ice; and when about four or five o'clock in the morning, the thinnest is obtained, called flower-ice.

"Upwards of two hundred and fifty persons of all ages are actively employed in securing the ice for some hours every morning that ice is procured, and this forms one of the most animated scenes to be witnessed in Bengal. In a favorable night upwards of 10 cwt. of ice will be obtained from one bed, and from twenty beds upwards of 10 tons.

"When the wind attains a southerly or easterly direction, no ice is formed, *from its not being sufficiently dry*; not even though the temperature of the air be lower than when it is made with the wind more from a northern or western point. The N.N.W. is the most favorable direction of wind for making ice, and this diminishes in power as it approaches the due north or west. In the latter case more latitude is allowed than from the N.N.W. to the north. So great is the influence of the direction of the wind on the ice, that when it changes in the course of a night from the N.N.W. to a less favorable direction, the change not only prevents the formation of more ice, but dissolves what may have been formed. On such occasions a mist is seen hovering over the ice-beds, from the moisture over them, and the quantity condensed by the cold wind. A mist, in like manner, forms over deep tanks during favorable nights for making ice. Another important circumstance in the production of ice is the amount of wind. When it approaches a breeze no ice is formed. This is explained by such rapid currents of air removing the cold air, before any accumulation of ice has taken place in the ice-beds. It is for these reasons that the thickest ice is expected when during the day a breeze has blown from the N.W., which thoroughly dries the ground.

"The ice-dishes present a large moist external surface to the dry northerly evening air, which cools the water in them, so that, when at 60°, it will in a few minutes fall to 56°, or even lower. But the moisture which exudes through the dish is quickly frozen, when the evaporation from the external surface no longer continues relative; a more powerful agent then produces the ice in the dishes.

"The quantity of dry straw in the ice-beds forms a large mass of a bad conductor of heat, which penetrates but a short way into it during the day; and as soon as the sun descends below the horizon, this large and powerfully-radiating surface is brought into action, and affects the water in the thin porous vessels, themselves powerful radiators. The cold thus produced is further increased by the damp night air descending to the earth's surface, and by the removal of the heating cause, which deposits a portion of its moisture upon the now powerfully radiating and therefore cold surface of the straw, the water, and the large moist surface of the dishes. When better radiators (?) of heat were substituted, as glazed white, or metallic dishes, the cold was greater, and the ice was thicker, and the dishes were heavier in the morning than the common dishes. Any accumulation of heat on their surface from the deposit of moisture is prevented by the cold dry northwest airs which slowly pass over the dishes. The wind quickly dries the ground, and declines towards night to moderate air. The influence of these causes is so powerful that I have seen the mercury in the thermometer placed upon the straw between the dishes descend to 27°, when three feet above the ice-pits it was 48°.

"So powerful is the cooling effect of radiation on clear nights in tropical climates, that in very favorable mornings, during the cold season, drops of dew may sometimes be found congealed in Bengal upon the thatched roofs of houses, and upon the exposed leaves of plants. In the evening the cooling process advances more rapidly than could be supposed by one who has not experienced it himself, and proves the justness of his feelings, by the aid of the thermometer. In the open plain on which the ice is made, I have seen the temperature of the air, four feet above the ground, fall from 70.5° to 57°, in the time the sun took to descend the last two degrees before his setting."

Incorporated 1866.

HARTFORD STEAM BOILER INSPECTION AND INSURANCE CO. HARTFORD, CONN.

Charter Perpetual.

Issues Policies of Insurance after a Careful Inspection of the Boilers,

COVERING ALL LOSS OR DAMAGE TO

BOILERS, BUILDINGS, AND MACHINERY.

ALSO COVERING

LOSS OF LIFE AND ACCIDENT TO PERSONS

ARISING FROM

Steam Boiler Explosions.

Full information concerning the plan of the Company's operations can be obtained at the

COMPANY'S OFFICE, HARTFORD, CONN.,

Or at any Agency.

J. M. ALLEN, President. W. B. FRANKLIN, Vice-Prest.
J. B. PIERCE, Secretary. FRANCIS B. ALLEN, 2d Vice-Prest.
E. J. MURPHY, M. E., Consulting Engineer.

Board of Directors.

J. M. ALLEN, President.
FRANK W. CHENEY, Treas. Cheney Brothers Silk Manufacturing Co.
CHARLES M. BEACH, of Beach & Co.
DANIEL PHILLIPS, of Adams Express Co.
RICHARD W. H. JARVIS, Prest. Colt's Fire Arms Manufacturing Co.
THOMAS O. ENDERS, President of the U. S. Bank.
LEVERETT BRAINARD, of The Case, Lockwood & Brainard Co.
GEN. WM. B. FRANKLIN, U. S. Commissioner to the Paris Exposition.
NEWTON CASE, of The Case, Lockwood & Brainard Co.
NELSON HOLLISTER, of State Bank, Hartford.
HON. HENRY C. ROBINSON, Attorney-at-Law, Hartford.
HON. FRANCIS B. COOLEY, of the National Exchange Bank, Hartford, Conn.
A. W. JILLSON, late Vice-Prest. Phœnix Fire Ins. Co., Hartford, Conn.
EDMUND A. STEDMAN, Treasurer of the Fidelity Co., of Hartford, Conn.
CLAPP SPOONER, Bridgeport, Conn.
GEORGE BURNHAM, Baldwin Locomotive Works, Philadelphia.
HON. NATHANIEL SHIPMAN, Judge United States Circuit Court.

A. S. Ferry, General Agent, Office at Hartford, Conn.

GENERAL AGENTS.	CHIEF INSPECTORS.	OFFICES.	
THEO. H. BABCOCK,	R. K. McMURRAY,	NEW YORK CITY.	Office, 285 Broadway.
CORBIN & GOODRICH,	WM. G. PIKE,	PHILADELPHIA.	" 430 Walnut St.
LAWFORD & McKIM,		BALTIMORE, Md.	" 22 So. Holliday St.
C. E. ROBERTS,	WM. U. FAIRBAIRN,	BOSTON, MASS.	" 35 Pemberton Sq.
		PROVIDENCE, R. I.	" 29 Weybosset St.
H. D. P. BIGELOW,	H. D. P. BIGELOW,	CHICAGO, ILL.	" 112 Quincy St.
C. C. GARDINER,		ST. LOUIS, MO.	" 404 Market St.
L. B. PERKINS,	F. S. ALLEN,	HARTFORD.	" 218 Main St.
W. G. LINEBURGH & SON,	J. H. RANDALL.	BRIDGEPORT.	" 11 Franklin Block.
GEO. P. BURWELL,	C. A. BURWELL,	CLEVELAND.	" 208 Superior St.
MANN & WILSON.	J. B. WARNER,	SAN FRANCISCO.	" 306 Sansome St.
ZOLLARS & McGREW,	T. E. SHEARS,	DENVER, COL.	" Granite Bl'g, Rm's 3,4.
LEITH & MANLY,	B. F. JOHNSON,	BIRMINGHAM, ALA.	" 2015 First Ave.
W. S. HASTIE & SON,		CHARLESTON, S. C.	" 44 Broad St.

The Locomotive.

PUBLISHED BY THE HARTFORD STEAM BOILER INSPECTION AND INSURANCE COMPANY.

NEW SERIES—VOL. XI. HARTFORD, CONN., AUGUST, 1890. No. 8.

WE have had so many inquiries concerning the connection of steam pipes to boilers and rotaries, and relating to the support of long lines of pipe, that we have decided to issue a special number of the LOCOMOTIVE, giving a number of articles upon these subjects. Most of the matter in this issue has appeared in the LOCOMOTIVE previously, but we think it will be found much more convenient to have it reproduced in the present manner, so as to facilitate reference. Main steam pipes are often very troublesome things, and care should be exercised, in putting them up, to allow for their expansion and contraction as they are alternately heated and cooled. The devices herein shown are the outcome of our experience, and we believe they will be found satisfactory in every case.

CONNECTING STEAM PIPES TO BOILERS.

After boilers are properly arranged and set up, the next important point to be considered is the arrangement of the main steam pipes and their connections, for unless these are properly designed and put up, much trouble is apt to ensue. The points to be con-

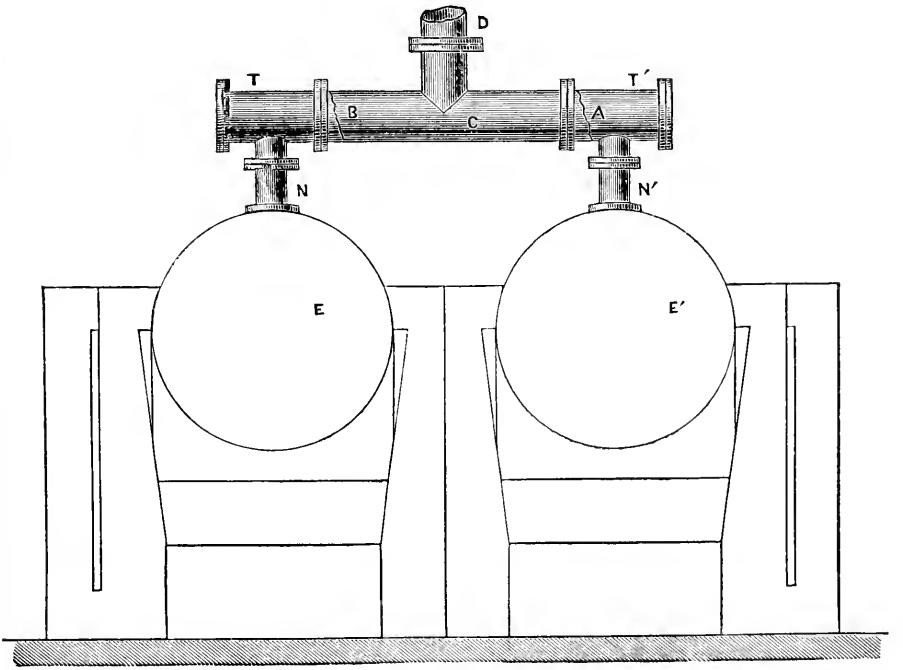

FIG. 1.

sidered, but which are very often neglected, are to provide for the effects of expansion, and also to make allowance for any settling of the boilers which may, and generally does, occur after they have been run a short time.

Fig. 1 shows a case where two boilers were improperly connected. Cast-iron tees were bolted to the nozzles, and connected by means of a cast-iron pipe, which had an outlet on top, as shown, from which the steam pipe was led. It will be seen at once that the boilers were rigidly bound together, by this arrangement. After a short time the tee on No. 2 cracked off as shown at A; this was replaced with a new one, and soon

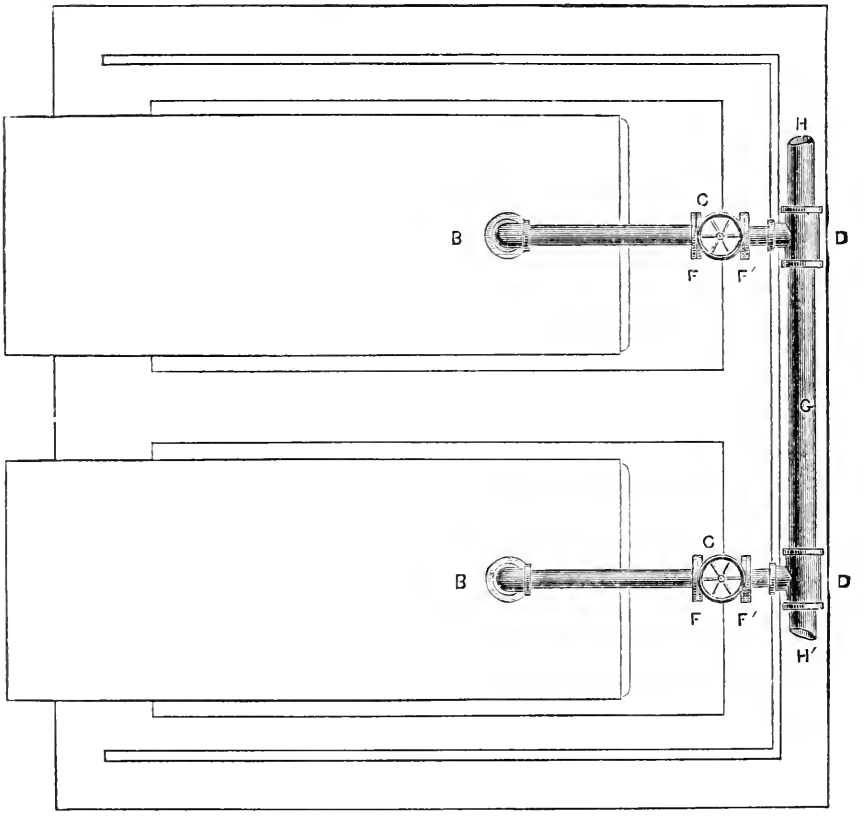

FIG. 2. PLAN.

afterward the pipe connecting the two boilers broke off at B. Both these breaks occurred while the boilers were in use, and of course resulted in their stoppage until the broken pieces could be renewed. The only strange thing in connection with the affair was the fact that the breaks did not occur the first time steam was gotten up.

Cast-iron pipe should be used with caution for such purposes, as from its brittle nature accidents are liable to occur at any time. Wrought-iron pipe is better every way, and should always be used. But in no case can the use of such connections as that shown in Fig. 1 be justified. Only a very inexperienced engineer would design such a connection, and no steam-fitter should put it up without entering a strong protest against it. No provision whatever is made for the motion of the boilers due to expansion, or settling of the foundations or walls.

Figures 2 and 3 show what we consider a properly-designed arrangement of steam connections for a battery of boilers. Wrought-iron pipe is used. To the nozzles risers

are attached by means of flanges, and from the upper ends of these risers pipes are led horizontally backwards into the main steam-pipe. In this horizontal pipe, the stop-valves, one to each boiler, are placed. These valves should have flanged ends as shown, so that they may be easily removed, if repairs become necessary, without disturbing any other portion of the piping. The main steam-pipe may be supported by means of long hangers from the roof of the boiler-house, when practicable, or if this cannot be done, it may be held up by posts which rest on the back wall of the boiler-setting, or any other convenient place.

By this arrangement it will be seen that the movements of the boilers and the piping itself are compensated for by the spring of the pipes, and no trouble will ever occur. The height of the risers should never be less than three feet, and when there are eight or ten boilers in one battery, they should be, if room permits, six to eight feet high, and the horizontal pipes leading to main steam-pipe should be ten to twelve feet or more.

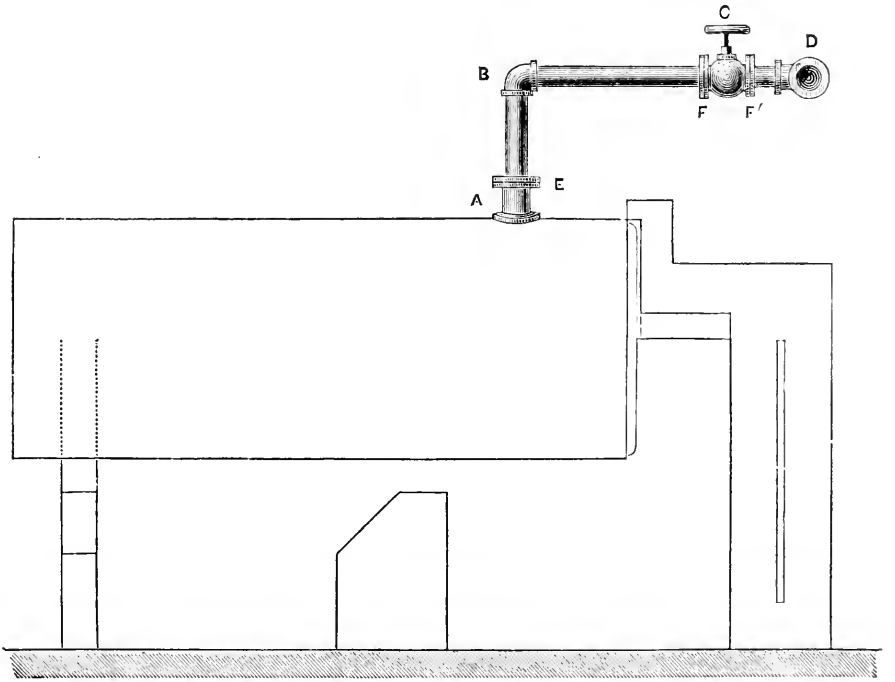

Fig. 3. Side Elevation.

THE SUPPORT OF MAIN STEAM PIPES.

Steam pipes are often hung up in a most slipshod and inefficient manner, no proper allowance being made for the movement of the pipe by expansion. As a consequence, joints are strained and leak continually; flanges are broken off, and in many instances the hangers are pulled out and the whole line, or a portion of it, tumbles down bodily. The usual support for steam pipes is shown in Fig. 4. It consists simply of a ring or loop which is slipped over the end of the pipe, and supported by a gimlet-pointed hook which is screwed into a beam above and admits of no adjustment. If the pipe is of any considerable length the ring, when steam is turned on, assumes the position shown by the dotted lines in the cut. The pipe is raised, severe strains are thrown on the joints, and, unless a section is left uncovered where the hanger comes, the covering is badly torn. Few realize the severity of the strain set up in a long line of large pipe by using a hanger of this kind. We have seen the extreme end of such a line lifted up clear of the hangers by the upward curvature thus produced, so that the

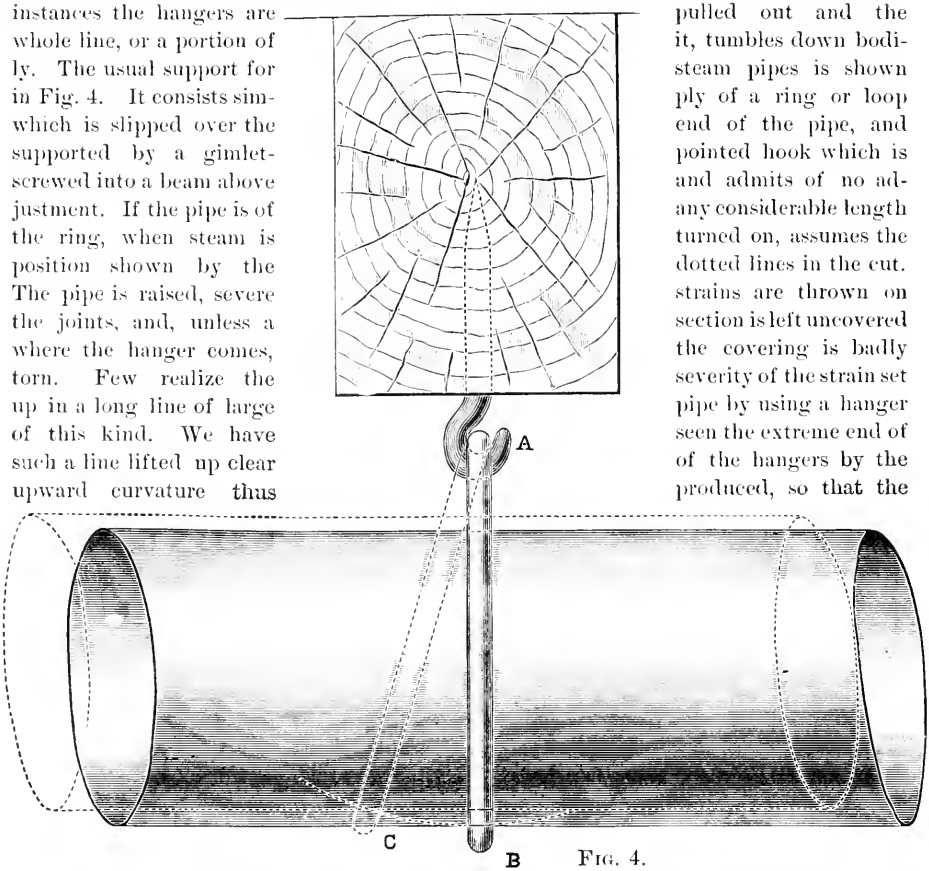

FIG. 4.

hangers along the middle of the line supported the entire weight of the pipe. In many cases the ring will be found lifted clear out of its supporting hook. Of course it is evident that when this is the case those hangers which do remain in place have to carry a greatly increased load, so that unless they are of excessive strength they are apt to give way. When one breaks the shock throws a severe strain on the next one, and if that gives out the whole line of pipe is pretty sure to come down.

Pipe of any considerable size should always be supported by some sort of hanger that will admit of a parallel motion when the pipe expands. Fig. 5 is a side view and Fig. 6 an end view of one of the cheapest and best forms of hanger where the motion of the pipe is not very great. Two clips are made of $3'' \times \frac{1}{2}''$ flat iron bent around to fit the pipe, so that when the nuts on the bolts at A and F are screwed up the pipe is tightly gripped. The upper ends of the clips are not brought together, but are left a few inches apart, and of sufficient length to allow the roll C to be placed between them as shown. The bolt passing through the clips and roll forms a bearing for the roll, which is grooved on its periphery, and runs on the bar G, which in turn is supported by the lag bolts screwed into the beam as shown. The pipe may be raised or lowered by simply turning the nuts on the bolts, and may be set at any desired height.

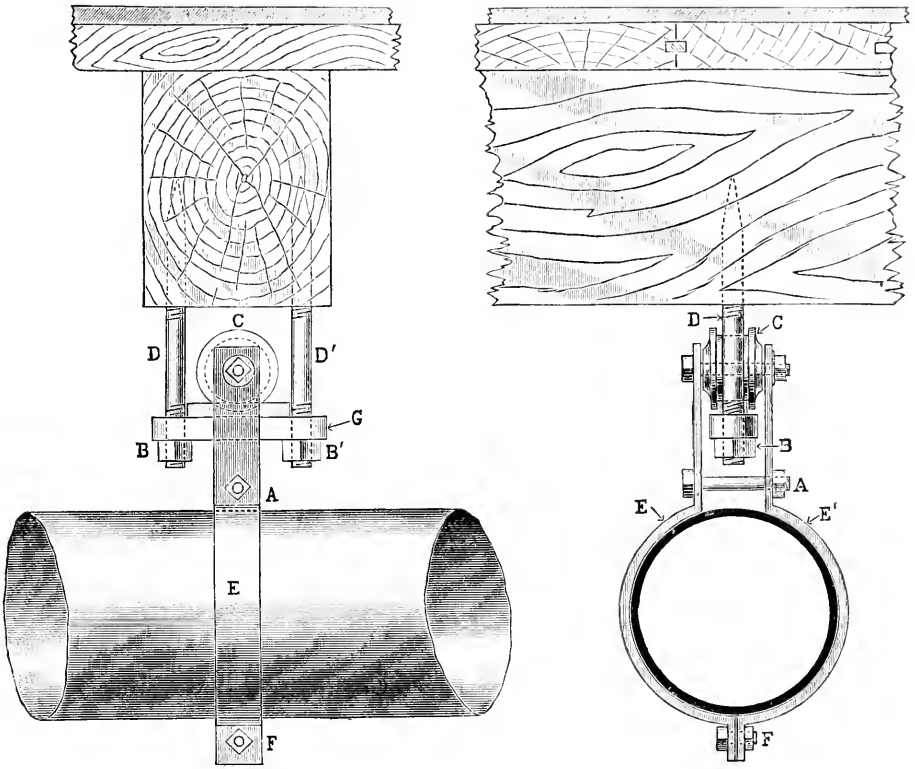

FIGS. 5 AND 6.

Figs. 7 and 8 show a hanger exactly similar in principle to the one just described, but available in a case where it would be necessary to carry a pipe as close as possible to

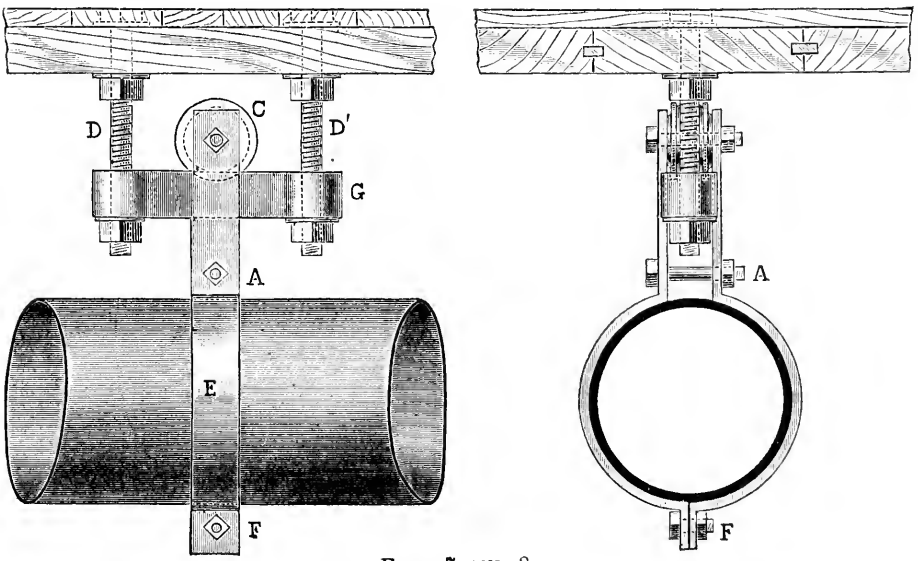

FIGS. 7 AND 8.

the timbers. In this case the weight of pipe would be carried by the floor planks instead of the beams. With mill floors as constructed at the present time, this would form a good support, especially if it were placed close beside a beam. Two bolts are

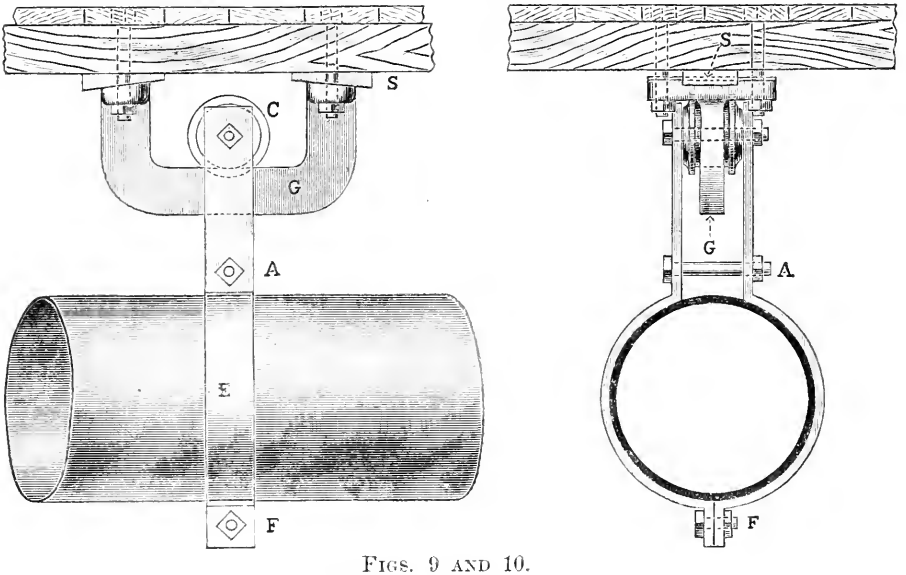

FIGS. 9 AND 10.

let through the floor, the heads being flush with its upper surface so as to offer no obstruction. The bolts should be a "driving fit" through the planking, and have their threads cut of such a length that a nut and washer may be screwed up to the under side

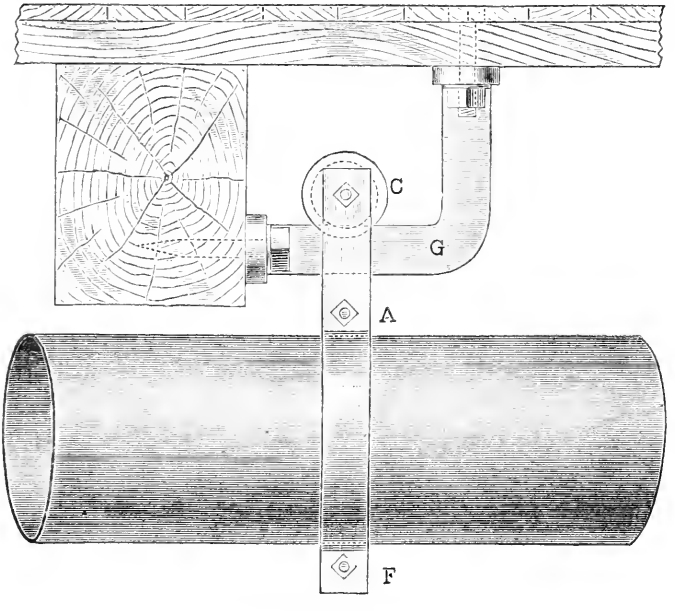

FIG. 11.

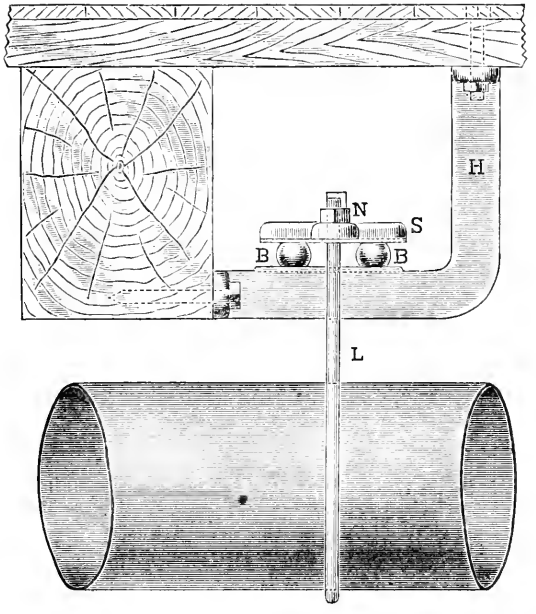

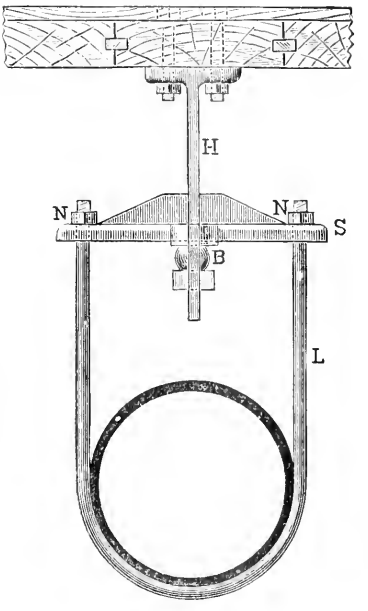

FIGS. 12 AND 13.

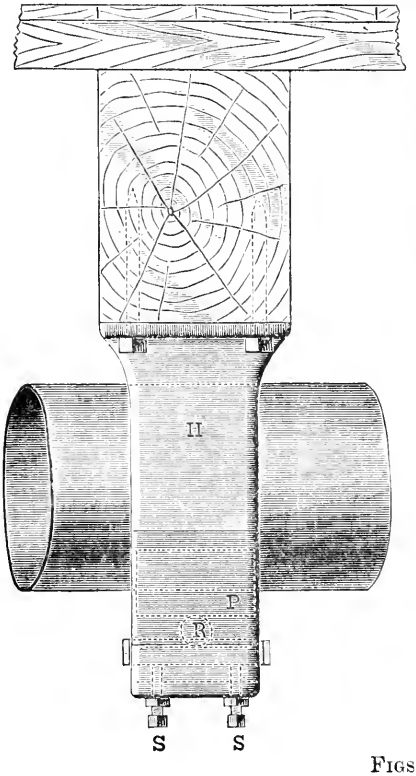

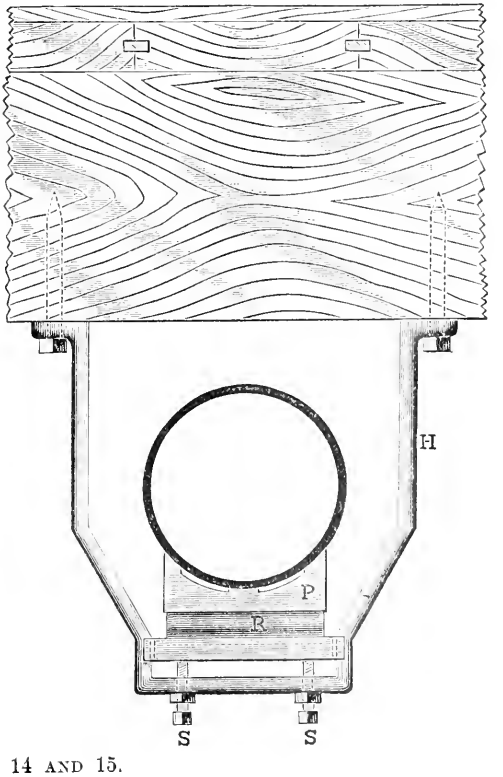

FIGS. 14 AND 15.

of the plank. The pipe is suspended from these bolts by means of bar, roll, and clips exactly as in Figs. 5 and 6, and the same facility of adjustment in a vertical direction is obtained as in that design.

Figs. 9 and 10 show another form of hanger, in which the vertical adjustment is obtained by "shimming" with the wedges shown at S S, the remaining part of the design being similar to those already described. The objection to this form is, that the vibration and shrinkage of the floor is apt to loosen the wedges so that frequent adjustment becomes necessary. This form might be used in some places with satisfaction, but we should not recommend it in preference to the ones described above.

Fig. 11 shows another kind in which no provision is made for adjustment vertically. When a line of pipe is run close to a wall so that there is no chance for the timbers or floor to settle appreciably, and so throw the pipe out of line, this form will answer every purpose if carefully put up in the first place.

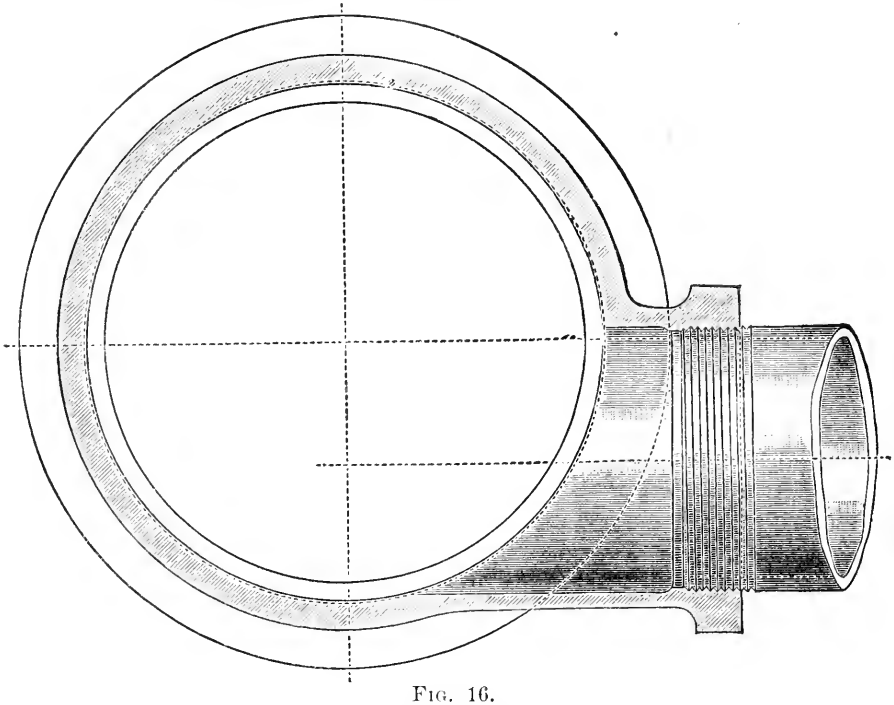

FIG. 16.

Figs. 12 and 13 show a different form of clip from those previously described. This is simply a bar of round iron bent around to fit the pipe and with threads cut on the ends. The ends of this clip pass through holes in the plate S, and are provided with nuts which enable one to make adjustment in a vertical direction. The plate S rests on two cast-iron balls, B B, which roll with scarcely any friction as the pipe expands.

Figs. 14 and 15 show a hanger made on a different principle, and which does not interfere with the pipe covering. A cast-iron saddle, P, carries the pipe and rests on a cylindrical roller, R, which gives the required freedom of motion endwise to allow for expansion. The friction in this construction is also very slight. The plate on which the roller R rests is supported by four set screws, S S S S, by means of which the vertical adjustment is obtained, and the whole is supported by the casting, H, which is securely bolted to the beam overhead.

THE ATTACHMENT OF NOZZLES TO STEAM DRUMS.

To the best of our knowledge we have never seen the nozzles of a large steam drum, that is, those forming the connection between the boilers and drum, put on as they should be. This seems to be rather a sweeping statement, and may seem to reflect upon the abilities of our leading boiler-makers, steam engineers, pipers, and others who have had more or less to do with the designing of such work, but it is nevertheless true.

For drums up to ten inches in diameter, made usually of ordinary steam pipe, the connections from the boilers are generally by means of the ordinary screwed tee. We will suppose, for instance, that four sixty-inch boilers are set in a battery. Then the drum would be of ten-inch pipe, the steam pipe from each boiler, five inch, and they would connect with the drum with a 10″ x 10″ x 5″ tee with inlet, outlet, and branch all threaded, and the whole screwed together.

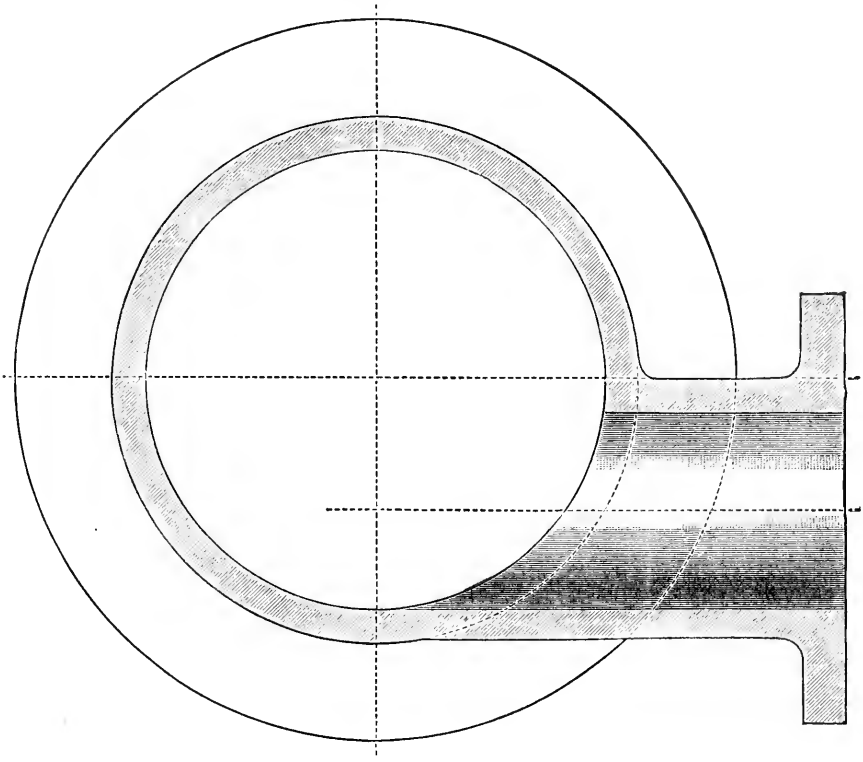

Fig. 17.

So far this is all right. But the pipes leading from the drum to the engine and other parts of the establishment are not usually the full size of the drum. They will oftener be found not over six inches in diameter, and are taken out by means of the usual forms of fittings. These pipes being led horizontally from the drum, with all centers at the same height, leaves a chance for water to collect in the lower part of the drum. This is apt to cause trouble unless the drum is dripped. This drip must be connected to all the boilers and be furnished with valves so that the water may always be returned when but one boiler is running, and that one, any boiler of the battery.

This arrangement works all right, but it is of the nature of a makeshift, and the work should be done in such a manner that it is not necessary.

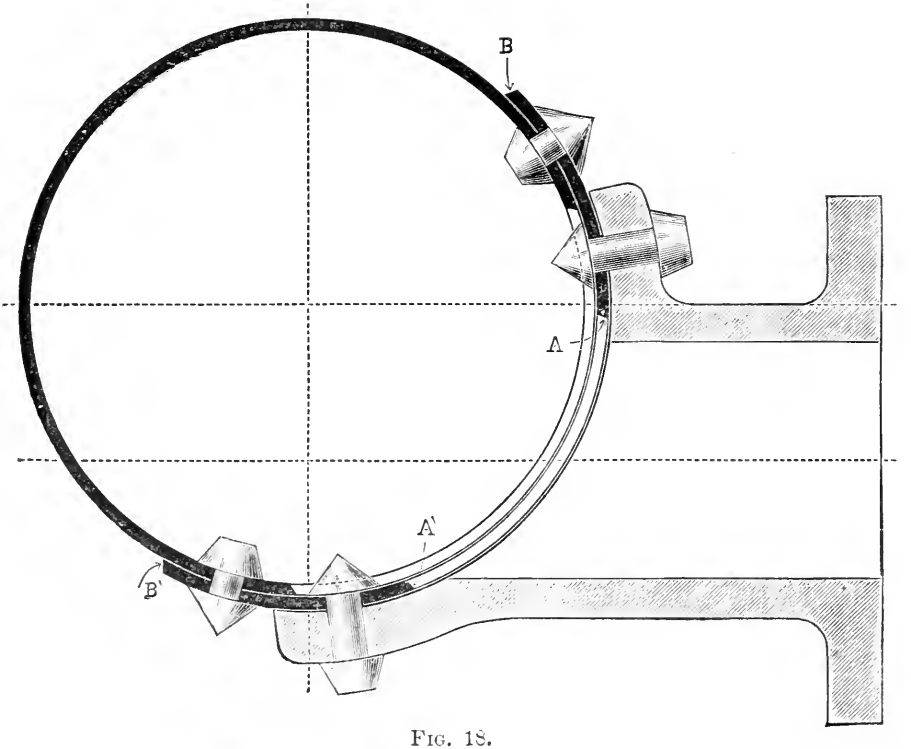

FIG. 18.

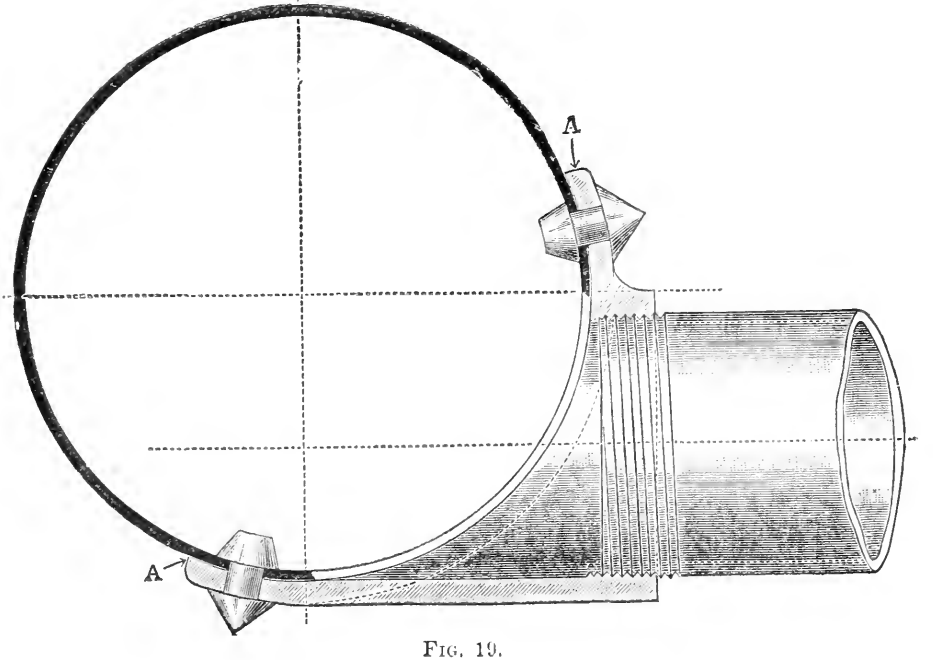

FIG. 19.

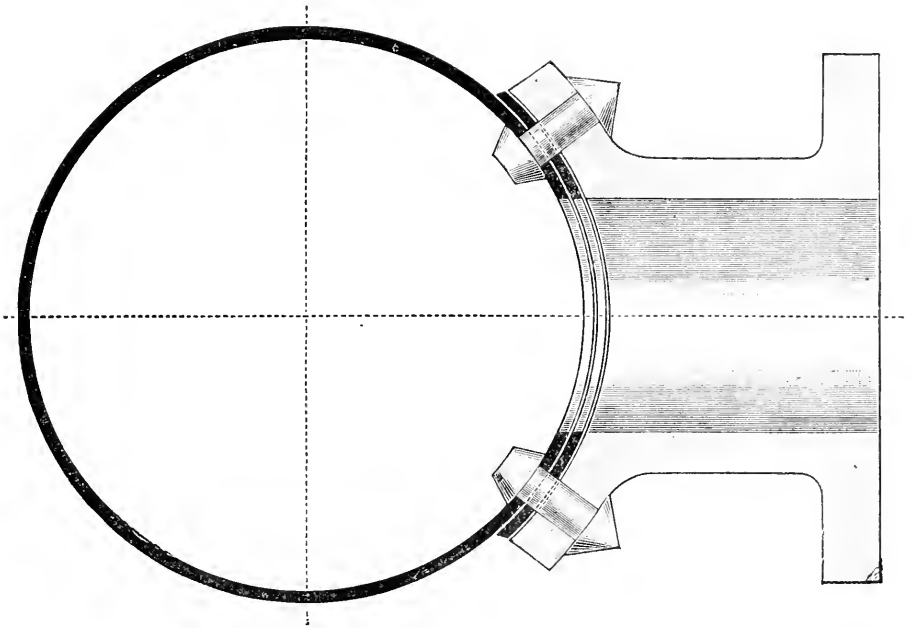

FIG. 20.

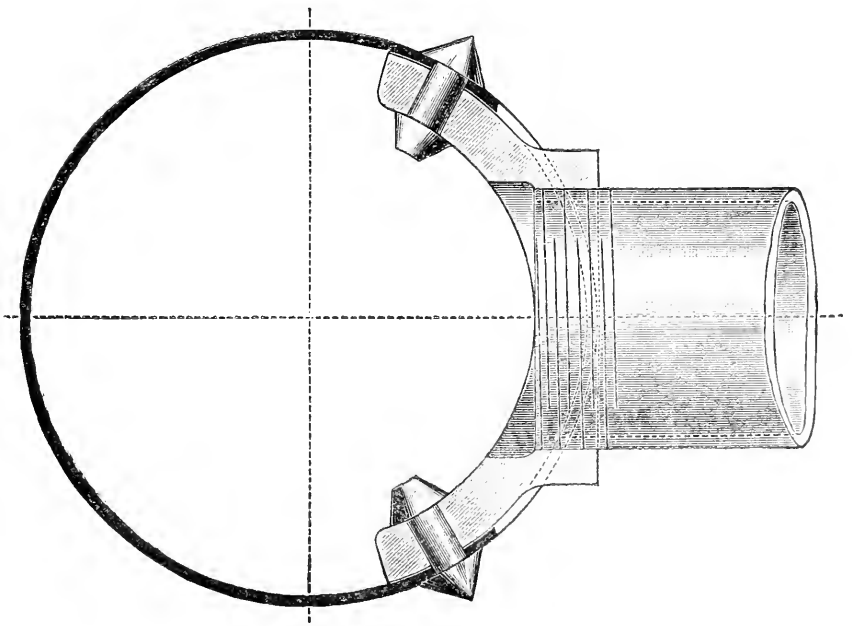

FIG. 21.

The connections to the boilers should be made by means of eccentric fittings. Figures 16, 17, 18, and 19, show in section, fittings adapted to this purpose, which would cost no more than those of the ordinary pattern, and the expense of the drip connection would be saved.

Fig. 16 shows an ordinary screwed tee, with the exception that the branch which receives the steam pipe from the boiler is dropped, so that the bottoms of the pipes forming the drum and that leading from the boiler are at the same level. Then when connection is made with any boiler in the battery, the drum always has a chance to drip freely back into the boiler. Under no circumstances can water collect in the drum, and no extra piping is required.

Fig. 17 shows a section through the branch of a cast-iron flanged tee, such as would be used in making the connection with a pipe larger than ten inches in diameter. The same remarks apply as in the case of Fig. 16.

Fig. 18 is a section through a nozzle such as would be put on a large drum, either of lap-welded pipe, or a riveted-up drum. It should be put on eccentrically when connections to the boilers are made. For pipes leading out of the drum this is not essential, and the connection had better be made as shown in Fig. 21 further on.

A word here about putting nozzles of this kind on to drums. A common way of doing it is shown in Fig. 20. A "shim" or caulking piece of wrought-iron is put between the pipe and the base of the nozzle, and the rivets extend through pipe, shim, and flange of nozzle, and are driven from the outside. The joint is then made tight by caulking the edge of the shim. As the rivets are driven from the outside against the rigid cast-iron flange, it is impossible to bring the flange and pipe into close contact, and very hard caulking is resorted to. Even this generally fails to make a permanently good job, leakage is apt to set in soon, and is difficult to stop. Fig. 18 shows a much better way to do this job. A patch is first riveted to the nozzles, and caulked at "A." This is then riveted to the pipe and caulked at "B." By this means a permanently tight piece of work is secured.

But a better way still to do this work would be to use a mild cast-steel nozzle as shown in Fig. 19. The rivets can then be driven from the outside, the edge of the flange brought down closely to the pipe, and caulked at "A" in the usual manner. This form of nozzle would leave nothing to be desired. We believe that steel castings can easily be obtained at the present time possessing the requisite qualities for a nozzle of this kind.

Fig. 21 shows the best method of making the nozzle attachment to drums of large size, either riveted up or made of welded pipe, when the branch pipe is taken out on the center, although for some reason or other it is seldom used. The cast-iron screwed nozzle is simply riveted to the inside, which allows the rivets to be driven from the outside, the iron of the drum is brought closely down to the flange of the nozzle, and the caulking edge is outside, in short a *good job* is *easily* made, whereas, if the nozzle is put on the outside of the drum a *botch job* is made at much *greater cost.* Of course if the drum is large enough to admit men inside to drive rivets, and do efficient caulking, as good a job can be made in one case as in the other, but such large drums cannot be advised. They are useless and expensive appendages.

ECCENTRIC STEAM FITTINGS.

The application of the eccentric principle to the main steam-pipe connections, described above, can be extended with advantage to couplings for long lines of pipe,

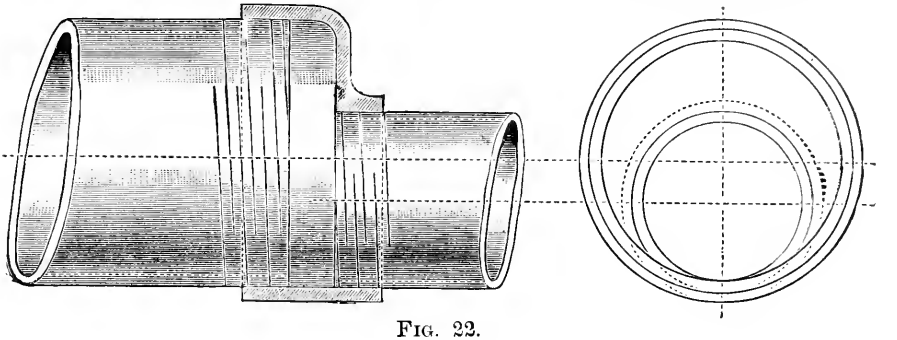

FIG. 22.

and with especial advantage to fittings used in steam-heating systems. With the ordinary style of couplings, when the size of a steam main is reduced, it is necessary to put in a relief or drip pipe, sometimes at considerable expense and trouble, whereas if an eccentric reducing coupling were used, which would cost no more than one of the ordinary kind, the water of condensation would flow freely onward.

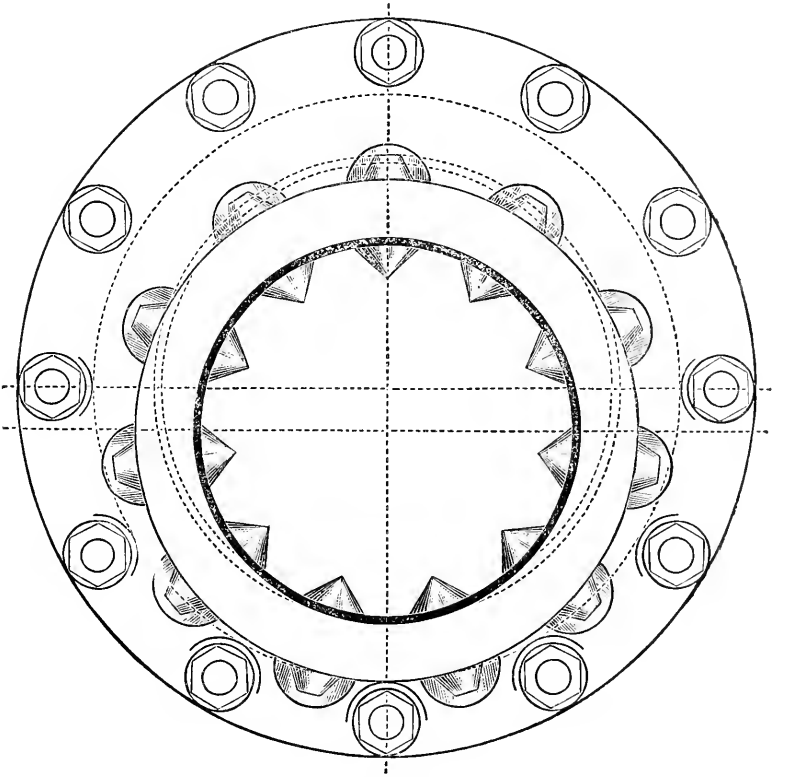

FIG. 23.

Fig. 22 shows in section a form of reducing coupling which could be used with advantage on all sizes of pipe up to eight or ten inches in diameter. Figs. 23 and 24, end and side views, of flange couplings for the larger sizes of pipe. The construction will be readily understood from an inspection of the cuts. The offset is just sufficient to bring the under sides of the pipes on the same level.

It will probably be urged as an objection to this style of fitting that they are not made and kept in stock by manufacturers of pipe fittings. This objection will vanish

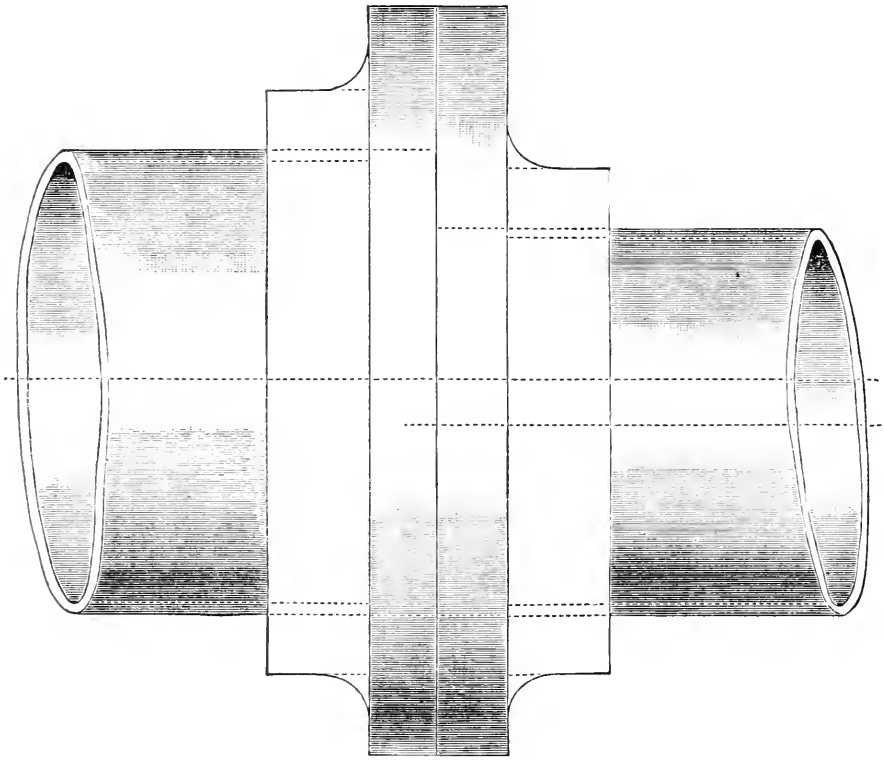

FIG. 24.

as soon as there is any *demand* for them. They will be found of far more use, and would probably be used a hundred times at least where a cross-valve is used once, still the latter is a standard fitting because it is occasionally called for.

CONNECTIONS FOR ROTARY BOILERS.

When rotary boilers, as used in paper mills, are supplied with steam direct from the steam generating boilers, a great deal of trouble is sometimes caused by the digesting liquor flowing back through the steam supply pipes into the boilers, and into the pipes supplying steam for other purposes, whereby much damage is done to stock in process of manufacture. This flowing or working back is caused by fluctuations in the steam pressure at the boilers. For instance: Steam is at 60 pounds per square inch on boilers and rotary; there comes a sudden demand elsewhere for steam, or the fires have to be cleaned, and the pressure falls with comparative suddenness to 40 pounds per square inch in the boilers; the great body of stock and liquor in the rotary is at a pressure of 60 pounds, and temperature due to this pressure; the radiation of heat from the shell of

the rotary is not sufficient to reduce the pressure as fast as it falls in the boilers, and as a consequence the stored-up heat generates steam which flows out of the rotary toward the boilers, and takes along a share of the liquor. Also, when the level of the liquor is above the center of the main journal or steam inlet, as it is always supposed to be when working, the greater pressure of steam in the rotary will force the liquor back through the pipes, to an extent depending on the difference of pressure, the length of time it is maintained, and the condition of the check-valves in the steam pipe. It is the expe-

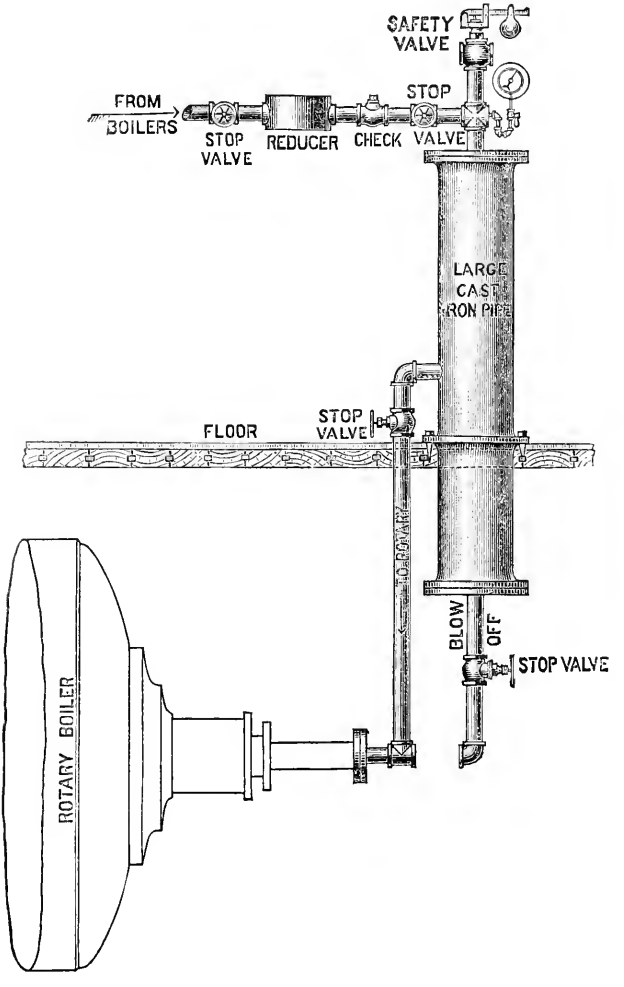

Fig. 25.

rience of manufacturers that a check-valve will not wholly stop the flowing back of the liquor, and even two or three have been put in without curing the trouble.

Of course, if a separate boiler could be used to boil the rotaries, and no other connections were made to it, the flowing back of the liquor would do no especial harm in many cases. We have known of cases, however, where the grease contained in the rags and stock under treatment, and which found its way back into the boilers,

has caused burning of the plates of the shell. But it is rarely desirable, or even practicable, to devote a special boiler to the duty of boiling the rotaries, hence some other means must be adopted to prevent damage to stock from the above-described cause.

The cut shows an arrangement that has been tried on rotaries in numerous instances, with success. The principle upon which the apparatus is based, is the use of a reduced pressure in the rotary, so that whatever the pressure in the boilers that in the rotary shall always be considerably less, and thus guard against the possibility of a backward flow of steam and liquor from it toward the steam-boilers. The steam coming from the boiler passes through a reducing-valve of any approved make, by which its pressure is reduced to whatever may be considered necessary for the work to be done in the rotary. After being reduced in pressure the steam passes through a check-valve, and then through a stop-valve. It then enters the top of a large iron pipe, from the side of which a pipe leads off to the rotary. A steam-gauge is attached to the large pipe, and likewise a safety-valve, weighted, say, to five pounds more than the reducing-valve is set at. This is to prevent the possibility of the full boiler pressure coming on the rotary, even if the reducing-valve should cease to operate. The stop-valve between the rotary and the large iron pipe should be first closed, when shutting the rotary off, for the following reasons: If the valve between the steam generators and the reducing-valve were shut first, the supply of steam would of course be cut off from all points beyond, and the rotary and all the pipe between it and the valve which was shut would begin to cool off by radiation. But owing to the fact that the pipes have a much greater amount of radiating surface in proportion to the volume of steam which they will hold than the rotary has, they will cool off much quicker; and since they are in free communication with the large body of steam and hot water in the rotary, the pressure will be kept up by a flow from the rotary into the pipes. Or we might express the action thus: The steam being shut off the pipes cool quickly, the steam condenses and forms a vacuum; the large body of steam in the rotary has not time to condense, hence the higher pressure in the rotary causes the liquor, and more or less stock, to "back up" into the pipes. The consequence is that the check-valve and safety-valve become clogged with stock and dirty liquor, and if, as would most likely be the case after the operation had been repeated a few times, the check-valve failed to close tightly, the reducing-valve and steam-gauge would be found in the same condition. Where no stop-valve has been used between reducer and rotary, rags have been found tightly forced into the nipple of the steam-gauge, being obliged to pass back through both check and reducing-valves in order to get there.

The use of the stop-valve between the rotary and the reducing apparatus and its connections, prevents all this trouble. If care is taken to *shut this valve first* when the rotary is to be blown off, no steam, liquor, or stock can get back beyond it to clog the safety-valve, check-valve, reducing-valve, or steam-gauge.

It will be understood that the large cast-iron pipe shown in the cut acts as a receptacle or trap for any liquor and stock that may be carried back, the blow-off at the bottom serving to remove all such material from the pipe.

The Locomotive.

PUBLISHED BY THE HARTFORD STEAM BOILER INSPECTION AND INSURANCE COMPANY.

NEW SERIES—VOL. XI. HARTFORD, CONN., SEPTEMBER, 1890. No. 9.

Boiler Fronts.

Boiler fronts are made in many different styles, almost every maker having some peculiar points in design that he uses on his own boilers and which nobody else uses. However, if we leave out the water fronts and the various patented fronts, we may classify all those that are used on horizontal tubular boilers under the four heads—(1) flush, (2) overhanging, (3) cut-away, and (4) fronts with breeching.

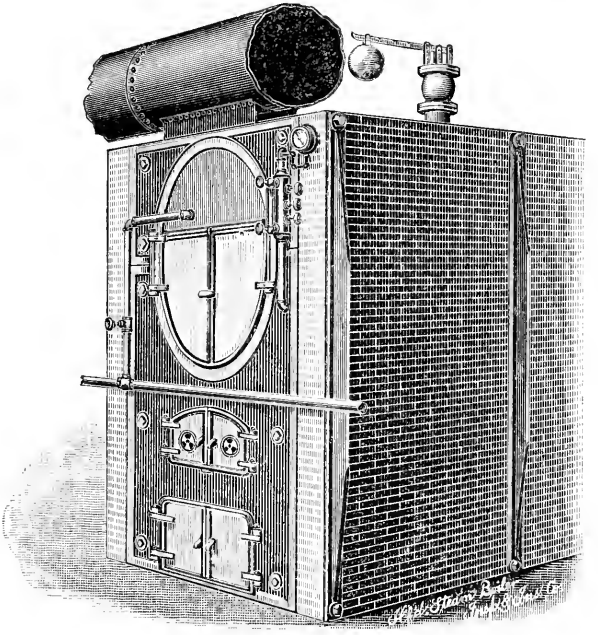

FIG. 1.—A FLUSH FRONT.

Fig. 1 is a perspective view of a flush front, and Fig. 2 is a sectional view of the setting. This was one of the earliest forms of fronts, and though it often gives good satisfaction, yet it is liable to certain accidents that will be presently explained, and we always recommend one or other of the three other styles.

As will be seen from the cuts, the front of the smoke arch, in this form of setting, is flush with the front of the brickwork, and the dry sheet just outside of the front head is built into the brickwork. The heat from the fire, striking through the brickwork, impinges on this sheet, which is unprotected by water on the inside. So long as the furnace walls are in proper condition the heat thus transmitted should not be sufficient to give trouble; but after running some time, bricks are very apt to fall away from over

the fire-door, and thus expose portions of the dry sheet to the direct action of the fire, causing it to be burned or otherwise injured by the heat, and perhaps starting a leakage around the front row of rivets where the head is attached to the shell.

In the overhanging front, shown in perspective in Fig. 3 and in section in Fig. 4, this tendency is entirely prevented by setting the boiler in such a manner that the dry sheet projects out into the boiler room. If the brickwork over the fire door falls away when a boiler is set in this manner, the only effect is to slightly increase the heating surface. No damage can be done, since the sheet against which the heat would strike is protected by water on the inside.

The objection is sometimes raised against the projecting front, that it is in the

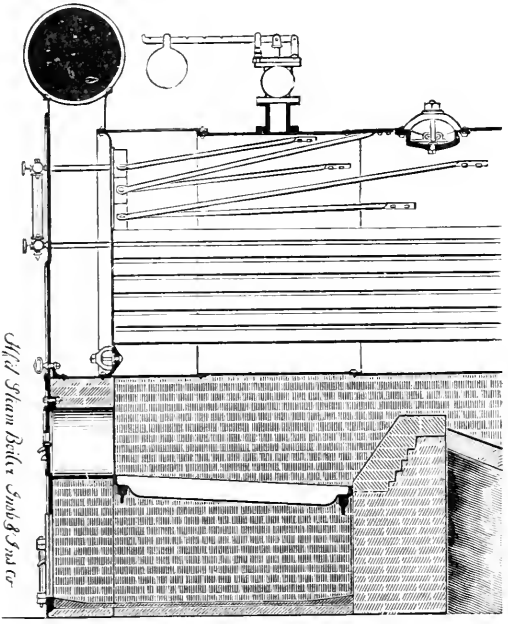

FIG. 2. — SECTIONAL VIEW OF FLUSH FRONT.

way of the fireman. To meet this point and yet preserve all the advantages of this kind of front, the cut-away style has come into use. It is shown in perspective and in section in Figs. 5 and 6, respectively. In this form the lower portion of the front sheet is cut obliquely away, so that at the lowest point the boiler projects but little beyond the brickwork. Although this style of front may have some advantages in the way of convenience, it has a serious disadvantage that should be well considered. It will be noticed that in the flush and overhanging fronts the doors open sidewise, swinging about vertical hinges. This is not always the case, as sometimes, and particularly in old boilers, the hinge is horizontal and the door swings upward. However, there is no reason why the hinges should *not* be placed vertically on these fronts. On the other hand, when the doors are oblique as in the cut-away front, it is not so easy to have them swing about vertical hinges. Such a hinge could be arranged, it is true, and we have seen them ; but they must project from the boiler, and they are unsightly and in the way. The best way to arrange the tube door in a cut-away front is to run the hinge along the top of it, horizontally, and to have the door open upward. But with such a disposition of things the door is not easy to handle, and, moreover, it must be supported

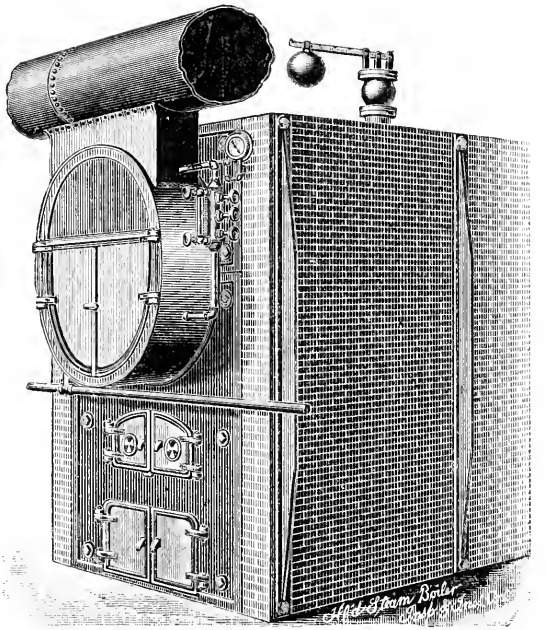

FIG. 3. — AN OVERHANGING FRONT.

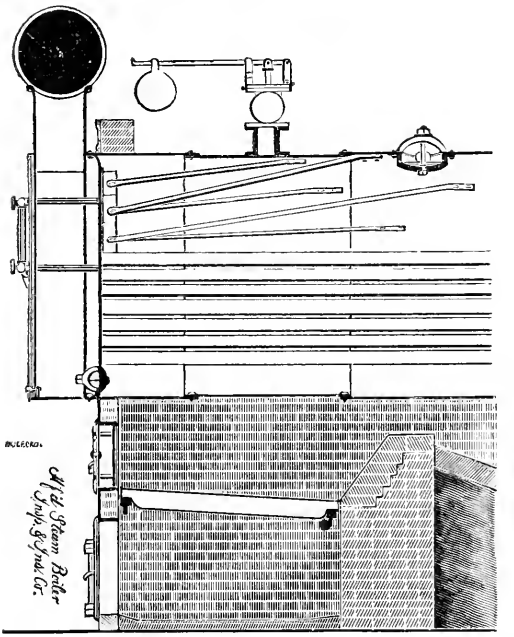

FIG. 4. — SECTIONAL VIEW OF OVERHANGING FRONT.

in some way when it is open. For the purpose of support a hook and chain, hanging from the roof, should be provided ; but there is a tendency among firemen to prop up

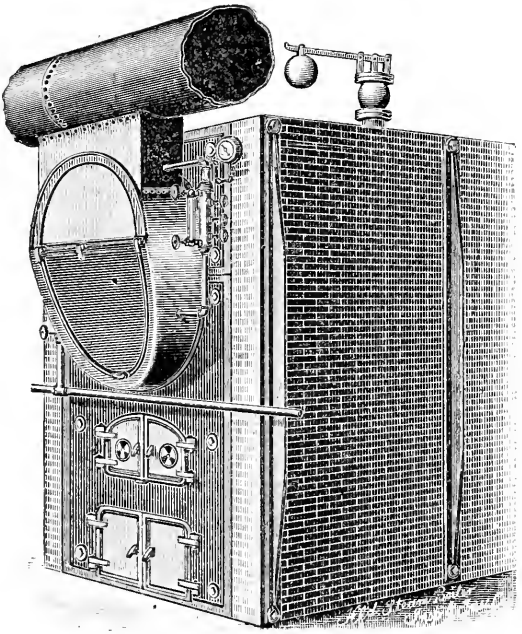

FIG. 5. — A CUT-AWAY FRONT.

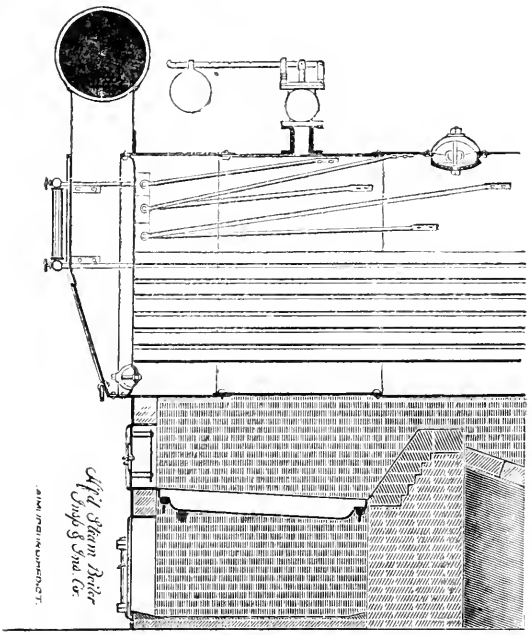

FIG. 6. — SECTIONAL VIEW OF A CUT-AWAY FRONT.

such a door with a piece of scantling, even when the chain is provided. The hook is not easy to reach or to manipulate, and the scantling is in every respect, save one, equal

to it. In working about a door thus propped open, there is an excellent opportunity to accidentally kick out the prop and let the door come down on the workman, doing him very grave injury, and perhaps killing him.

It may be said that this accident does not often happen. That is true, and yet it is a good plan to make it impossible that it should happen, by using doors with vertical hinges.

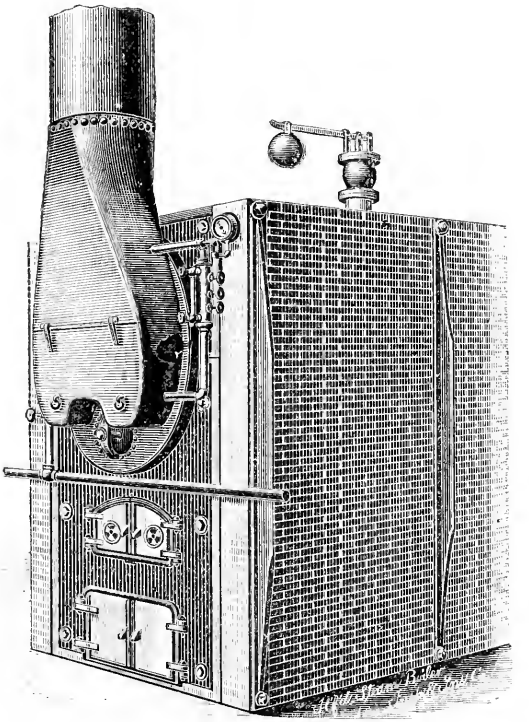

Fig. 7. — A Boiler with Breeching.

Fig. 7 shows a boiler the setting of which is similar in general design to those represented in Figs. 3 and 5, except that in the place of a cast-iron front it has bolted to it a short iron breeching that comes down over the tubes and receives the gases of combustion from them. In Fig. 7 a manhole is shown under the tubes. This, of course, is not an essential feature of the breeching, but it will be seen that manholes can readily be put below the tubes on fronts of this kind, in such a manner as to be very convenient of access.

By an oversight our engraver represented the valve *C*, in the leading article of the August Locomotive, in a wrong position. The stem should, of course, be horizontal, or nearly so, in order that the valve may not trap water.

If the first three odd numbers are written in a row, each one being repeated once, we shall have the number 113355. Now if this be separated into two parts by a line, thus 113)355, and the second half be divided by the first, the quotient will be found to 3.1415929. This differs only 2 in the seventh place of decimals from 3.1415927, which is the ratio of the circumference of a circle to its diameter.

Boiler Explosions.

JUNE, 1890.

SAW-MILL (95). The boiler in a portable saw-mill at Springfield, Pa., exploded on June 4th. The fireman was so severely injured that his recovery is doubtful, and another man was slightly scalded.

SAW-MILL (96). On June 5th a boiler exploded in Geo. Pickard's saw mill at Somerville, N. Y., killing the engineer.

BRICK YARD (97). The boiler of the 25-horse-power engine of the Jefferson City (Mo.) Brick Company exploded on the morning of June 7th. Although there were eighteen men in the immediate vicinity at the time, they all escaped unhurt, with the exception of three.

STEAM SHOVEL (98). The boiler of a steam shovel in the gravel pit of the Chicago, St. Louis & Pittsburg Railroad at Cable, seven miles east of Urbana, Ohio, exploded June 10th. There were a dozen men in the pit at the time, and without a second's warning a terrible explosion occurred. At the time of the accident there were eighty pounds of steam and three gauges of water in the boiler. The force of the explosion was so great that the top of the boiler was hurled seventy-five feet in the air and carried to the bank above the pit. Four persons were scalded by the flying water and steam. Charles Kerlin of Cambridge City, engineer of the steam shovel, was badly burned on the left side of the face. John J. Straft, engineer of the gravel train, was scalded about the face, neck, and head. Daniel Brennan, fireman of the steam shovel, was burned about the face and neck. John Beck, craneman, was scalded on the right shoulder and arm.

SHIPYARD (99). By a boiler explosion at Pregnall's shipyard, on Concord Street, Charleston, S. C., on June 11th, Mr. Arthur Pregnall and Mr. Paul Joenelli were badly but not fatally injured.

ELECTRO LIGHTING PLANT (100). At New Orleans, on June 15th, a boiler which furnished steam to drive the dynamo at Spanish Fort, exploded, scattering the machinery in all directions and slightly injuring the engineer.

STEAMBOAT (101). The boiler of a small steamer plying on the Sandusky River, near Upper Sandusky, O., exploded on June 15th, and injured three people.

AGRICULTURAL ENGINE (102). On the morning of June 17th there was a boiler explosion on the Van Nuys ranche, ten miles west of Burbank, a small station on the Southern Pacific road near Los Angeles. Joseph Loughrey, the engineer, was instantly killed and two others were seriously injured. The work of rolling barley was about to begin. The engine, with steam up, stood near the barley mill, and there were thirty or forty men within a radius of fifty feet. Without warning came a terrific explosion. The engineer was thrown eighty feet, alighting on a sack of barley. Thomas Henry, superintendent of the ranche, was struck in the forehead by a piece of iron. His injuries are very serious. Edward Henry, the superintendent's brother, was thrown to the ground and received an ugly cut under the right ear. Fireman Juan Wardrove was thrown fifty feet, and badly bruised about the head and body, and cut by splinters. Half a dozen others received slight injuries. An inquest was held in Loughrey's case, and the jury found that the explosion was accidental.

TUG BOAT (103). On June 17th, an explosion took place on the tug *Lightning*, belonging to the Atlantic Dredging Company, then at work at Newport News, Va., near the dry dock. Capt. Darby and the fireman were almost instantly killed, and the engineer was scalded so severely that there is no prospect for his recovery.

SAW-MILL (104). The boiler of an engine used for hauling logs from the river blew up at Jeffersonville, Ind., on June 18th. Charles Wright, the engineer, was thrown violently from his platform, about fifteen feet from the ground, and was fatally injured.

LUMBER MILL (105). The boiler in a lumber mill near Alpena, Mich., exploded on June 19th. The engineer was badly scalded.

SAW-MILL (106). On Saturday, June 21st, the boiler in Box Bros.' saw-mill, situated between Leesburg and Leeslick, Harrison County, Kentucky, exploded, completely wrecking the mill. There were only four men in the mill at the time of the accident, one of whom was instantly killed, and the others seriously injured. Thomas Box, one of the proprietors, was instantly killed. Joseph Giles, the engineer, was terribly burned about the back and face. James Connor and John Hayden, both colored, were terribly burned and bruised. Hayden is fatally injured. The force of the explosion was terrific, being heard over two miles away, and breaking the glass in windows several hundred yards from the mill. The boiler was blown 150 yards, tearing down trees and breaking them to pieces. A new steam gauge had recently been put on, and it did not work properly, the steam blowing off at sixty pounds. Mr. Box had made some repairs, and was testing the gauge when the explosion occurred. A similar accident occurred near this place fourteen years ago, in which three men were killed.

PLEASURE BOAT (107). A pipe in the Herreshoff boiler of J. Edward Addick's steel steam yacht *Now Then* burst off Claymont, near Wilmington, Del., on June 23d, injuring three of her crew. Between 9 and 10 o'clock the yacht met the steamer *City of Chester*, and steamed around her two or three times. Suddenly the pipe burst, blowing open the furnace door and sending the flames into the faces of her engineers and firemen. The chief engineer, name unknown, John Andrews, the assistant engineer, and Frank Johnson, fireman, were severely but not dangerously burned. The yacht was towed to her wharf. The *Now Then* is probably the fastest steam vessel in the world. She is shaped like a shuttle, and was built by the Herreshoffs, the torpedo builders. Her speed is between twenty-three and twenty-five miles an hour. She carries a crew of seven men, of whom Frank Torrey is Captain.

STEAM TUG (108). The steam tug *Alice E. Crew*, lying at the pier at the foot of Van Brunt street, South Brooklyn, was blown to pieces on June 23d by the explosion of the boiler, and four of the five men asleep in her cabin were instantly killed. The boat, which was considered a staunch one, and first-class in every particular, was wholly wrecked; nothing but a few fragments being found floating on the water. The force of the explosion was so great that it stove a hole in a barge which was being docked alongside of it, sending the barge to the bottom.

PAPER MILL (109). The large rotary boiler of the Columbia River Paper Mill, at La Camas, Wash., exploded with terrific force on June 24th, badly wrecking the main portion of the large engine room, but killing nobody.

AGRICULTURAL ENGINE (110). A fatal accident occurred on June 24th on the farm of William Craig, near Colchester, Ont. The boiler of a steam engine belonging to Thomas Quick exploded while the power was being used in shelling corn. Geo. Craig and Thomas Quick were killed, and Frank Quick is very low from the result of injuries received. Thomas Craig, Peter White, Frank Bondy, and Lindsey, the engineer, were severely injured.

SAW-MILL (?) (111). By the explosion of a boiler near Los Banos, Merced County, Cal., on June 25th, Fielding A. Hodges was badly injured. His leg was broken, and his face and eyes severely scalded.

STAVE MILL (112). The boiler in Frank Gardner's stave mill at North Star, Mich., exploded June 25th, killing Charles Brown, Fred Tucker, and the engineer, and fatally injuring four others, including the proprietor. The mill was totally demolished.

PORTABLE SAW-MILL (113). The explosion of the boiler of a portable saw-mill at South Lee, Mass., on June 26th, demolished the building, broke the right arm of Chas. G. Woodruff, the owner, and badly burned Edward Ferguson, the engineer, also injuring him internally.

THRESHING MACHINE (114). Four persons were injured, one perhaps fatally, by the explosion of the boiler of a steam engine used in running a threshing machine on the farm of Daniel A. Jones at Cecilton, Cecil County, Md., on June 30th. The engineer was frightfully scalded, and his condition is serious. Louis McCoy, the eight-year-old son of a neighbor, was also badly scalded. James Farrell, a workman, was knocked down, but not seriously hurt, and John Green was slightly scalded.

On Lack of Conscience as a Means of Success.

A little experience in life makes it plain that one element of what is called "success" consists in a certain toughness of the conscience. By "success" we mean, of course, worldly success under the present conditions. We do not mean the true and high success, the conduct of one's life in all honesty, with the rewards of a pure fame and the better rewards of conscious clarity of purpose, and fairness of action. We mean that men of business who are trying to live up to an ideal are very apt to find less scrupulous men passing them at certain points, and sometimes permanently outdoing them in the mere race for wealth, from the fact that the latter are less hampered at critical moments by conscientious considerations.

It is true that "honesty is the best policy" in the long run, and as a rule even in ordinary business affairs; and it is true that many men make a complete failure in life by disregarding this maxim. It is also true that dishonesty is one of the forces of worldly success.

The honest reader will perhaps ask, why this praise of dishonesty. But we are not praising dishonesty; we do not think it commendable in any way: on the contrary, we think, just as the honest reader thinks, that it is in every way condemnable and contemptible. We are, however, stating a palpable and provable fact — namely, that in the present constitution of society a lack of conscience may be an important, even a deciding, element of worldly success.

The point that we are getting at is this: namely, that it is easier to reap a certain kind of worldly success without conscience than with it; and that, therefore, the conscienceless man who reaches enormous wealth or high worldly position is not nearly so clever a fellow as his admirers think he is and proudly proclaim him to be.

We believe this to be particularly true in political life. Under the thoroughly un-American system of spoils and patronage, and by means of the prevailing system of corruption at the polls, it has been of late years prominently demonstrated that some of the highest public positions can be reached in America by men of well-nigh the lowest character. Now one reason that these men succeed is that "nothing succeeds like success"; and that even men themselves personally honest have a certain admiration for the ability of the conscienceless man of success. Our present effort is to remove a part of the credit of the successful rogue. If he is less admired perhaps he will be less successful; and if he is better understood perhaps he will be somewhat less admired. Well, then, it is a fact that the successful rascally politician, while doubtless having a certain amount of natural "smartness," is, in reality and upon close examination, not nearly so

"smart" as he superficially appears to be. Under the spoils system, which is only partly abrogated in the United States, it does not take — how ridiculously true it is that it does not take — great abilities to insure success in the corrupt manœuvers of the political field. The only wonder is when, under present conditions, a thoroughly scrupulous leader appears in local or general politics. To win success without resorting to the usual unscrupulous methods, — that is the test of real force, — there should be the focus of admiration.

The principle is true in ordinary business; it is true in politics; it is particularly true in the journalistic world. It is a harder task, it requires more genuine ability and greater "staying power," to reap worldly success in this field scrupulously than unscrupulously.

The fact is that there is altogether too much reverence for rascals, and for rascally methods, on the part of tolerably decent people. Rascality is picturesque, doubtless, and in fiction it has even its moral uses; but in real life it should have no toleration: and it is, as a matter of fact, seldom accompanied by the ability that it brags.

One proof that the smart rogue is not so smart as he thinks, and as others think, is that he so often comes to grief. He arrives at his successes through his knowledge of the evil in men; he comes to grief through his ignorance of the good in men. He thinks he knows "human nature," but he only half knows it. Therefore he is constantly in danger of making a fatal mistake. For instance, his excuse to himself for lying and trickery is that lying and trickery are indulged in by others — even by some men who make a loud boast of virtue before the world. A little more or less of lying and trickery seems to make no difference, he assumes — especially so long as there is no public display of lies and tricks, — for he understands that there must always be a certain outward propriety in order to insure even the inferior kind of success he is aiming at. But, having no usable conscience to guide him, he underrates the sensitiveness of other consciences, — and especially the sensitiveness of that vague sentiment called "public opinion," — and he makes a miscalculation, which, if it does not land him in the penitentiary, at least makes him of no use to his respectable allies; therefore of no use to his semi-criminal associates; therefore, a surprised, miserable, and vindictive failure. — *The Century.*

Smoking.

At Leipsig they recently celebrated the centenary of the pipe, and the *Petite Presse* seized upon the occasion to give a few notes upon the history of the use of tobacco in Europe, which will be interesting to smokers and their enemies.

Snuff, it appears, was the first form in which tobacco was used in France, and the pipe didn't make its appearance until the reign of Louis XIV. At that time the French Government began to distribute pipes among the soldiers. Jean Bart was an inveterate smoker, and the story goes that some Bourbon princesses used to smoke pipes. There was very little smoking in Europe in the eighteenth century. No great man of that time was a smoker. During the French revolution the pipe was comparatively unknown. Neither Robespierre, nor Danton, nor any one of the leaders of that period, was a smoker. But when Napoleon's army returned from Egypt the pipe became fashionable. Gen. Lassalle used to lead his cavalry charges with a pipe in his mouth; and d'Oudinot was the possessor of a splendid meerschaum, which was presented to him by Napoleon, and which was ornamented with stones to the value of about $7,500. Gen. Moreau, when his legs were about to be amputated, called for his pipe, that he might smoke it during the operation; but how he enjoyed it history doesn't state.

The Restoration brought about a reaction against the pipe, and it was not until 1830 that it regained a popularity which it has preserved up to the present time. Except perhaps in England, the pipe is considered out of place on the street; but at home it is just the thing in all sorts of society, and it is smoked by many great men, including Bismarck.

French poets have frequently compared a man's existence to a lighted pipe, whose contents pass off in smoke and ashes. In an old volume of the eighteenth century, entitled *Morale de Guérard*, there is an engraving representing a young man smoking a clay pipe, and the legend calls him the "Universal Portrait." This is followed by a queer old piece of poetry comparing everybody to a lighted pipe. — *New York Sun.*

The Locomotive.

HARTFORD, SEPTEMBER 15, 1880.

J. M. ALLEN, *Editor.* A. D. RISTEEN, *Associate Editor.*

THE LOCOMOTIVE *can be obtained free by calling at any of the company's agencies.*
Subscription price 50 cents per year when mailed from this office.
Bound volumes one dollar each.

Papers that borrow cuts from us will do us a favor if they will plainly mark them in returning, so that we may give proper credit on our books.

NOWADAYS a good many would-be inventors are striving to find a way to produce light without the tremendous wastefulness that all our existing methods give rise to. The successful man, as Professor Anthony says in a recent article in *Practical Electricity*, "will be the greatest discoverer of this or any other age. If he get a broad patent on it, he will have seventeen years of the grandest litigation the world ever saw."

DR. AUSTIN FLINT, the eminent New York Physiologist, is said to have declared that he "never knew a dyspeptic to recover vigorous health who undertook to live after a strictly regulated diet; and," he continues, "I have never known an instance of a healthy person living according to a strictly dietetic system who did not become a dyspeptic." The doctor is famous for knowing what he is talking about, even if his last remark does conflict with our family traditions.

The Value of a Good Reputation.

The following extract from an article by E. L. Godkin on the Rights of Citizens, in *Scribner's Magazine* for July, is commended particularly to young men:

"A man of good reputation is listened to with a deference which nothing but actual power can procure for a man of poor reputation. His advice, too, is taken with a readiness which his ability or experience may not always warrant, because there is a strong disposition in human nature to infer wisdom from goodness — a conclusion which is generally true in spite of the contempt often felt and expressed by 'practical men' for the opinions of moralists, like clergymen and philosophers, and in spite of the frequent exhibitions of incapacity in ordinary affairs of life made by men of undoubted purity and simplicity of character. Influence, of course, follows power, whether it be the power of wealth or of office, without much reference to the character of the holder; but it is enormously increased and strengthened by popular belief in a man's sincerity, kindliness, and honesty, and may, by the same help, survive the loss of both fortune and place.

"Though last, not least, reputation in trade and business takes the place to a large extent of capital. Every man whose character is held in high estimation by his neighbors can always command more credit than his visible means will warrant; that is to say, he can borrow to an extent which a mere examination of his assets would not justify. His promises are treated as if they were cash, although the manner in which they can be converted into cash may be unknown to those who trust him. In fact, if reputation were taken from under the fabric of modern commercial credit, the result would be an immense financial collapse. The larger part of it is built up on the assumption that the word of certain men is literally 'as good as their bond,' or, in other words, that they

feel moral obligations more strongly than legal ones. Illustrations of this proposition can be found in nearly every pursuit and calling. A lawyer's professional value is greatly increased by public confidence in his character; so is a doctor's, or architect's, or engineer's. The value of this confidence from a purely commercial point of view can hardly be estimated until a man loses it; then, and then only, can it be seen how much it had done for him. That particular men have been, and are, able to achieve worldly success in certain occupations without it is doubtless true, and a matter of common observation; but it will be found in nearly every such case that the absence of reputation has been compensated for by some rare peculiarity of mind or temperament."

Longitudinal vs. Girth Seams.

We have heard surprise expressed that boilers are made with triple-riveted butt joints along the longitudinal seams, while the girth seams are only single riveted. It is true that such a construction hardly looks right, at first sight, to one who has never given the matter consideration; but a little investigation will show that the girth seam is even stronger, in proportion to the load it has to carry, than the longitudinal one.

The strain on the longitudinal seam, per inch of its length, is known to be equal to the

$$\frac{diameter \times pressure}{2} \qquad (1)$$

This rule is demonstrated in all the text-books on the subject, so that we need not repeat, in this place, the reasoning on which it is based.

To find the strain on the girth seam, per inch of its length, we have to remember that the only strain that comes on this seam is the pressure that acts on the heads of the boiler, and tends to pull it apart endwise. The area of the head being $.7854 \times (square\ of\ the\ diameter)$, the total pressure upon it will be

$$.7854 \times (diameter)^2 \times pressure.$$

This pressure acts endwise along the boiler, tending to pull it apart; and it is withstood by the plates of the boiler, and, where these come together, by the girth seams. The length of each girth seam is the same as the circumference of the boiler; that is, it is equal to

$$3.1416 \times diameter.$$

The strain on each inch of the length of the girth seam is found by dividing the total strain upon it by the length of the seam. That is, it is equal to

$$\frac{.7854 \times (diameter)^2 \times pressure}{3.1416 \times diameter.}$$

Since 3.1416 is exactly 4 times .7854, we find from the above, by cancellation, that the strain on the girth seam, per inch of its length, is

$$\frac{diameter \times pressure}{4} \qquad (2)$$

By comparing (2) with (1) we see that the strain on the girth seam of a boiler is precisely half of the strain on the longitudinal seam; so that if the former is half of the strength of the latter, the two are equally well adapted to the loads they have to carry when the boiler is in operation. If the boiler has a triple-riveted butt joint with a strength of 87 per cent. of the solid plate, the girth seam will be abundantly strong if it is equivalent to 43½ per cent. of the solid plate. Now a well constructed single-riveted joint may easily have a strength of 56 per cent., so that it would still be amply strong, even if a longitudinal joint could be made with a strength equal to that of the solid

plate. In fact, if the girth seam has a strength of 56 per cent., the plates themselves should rupture longitudinally before the girth joint would give way.

Of course it will be understood that the foregoing remarks apply only to boilers in which the construction and materials are perfect. As a matter of fact it is occasionally recommended that girth joints be double riveted, though this is done only when the particular circumstances of the case seem to require it.

On the Strength of Triple Riveted Double Butt Strap Boiler Joints.

Some discussion having arisen regarding the proper method of computing the strength of a joint of this kind, in accordance with the Philadelphia rule, we propose to give two examples of such a calculation.

The Philadelphia law says that in estimating the strength of the longitudinal riveted seams in boilers, the following two formulæ shall be applied:

Formula A. From the pitch of the rivets subtract the diameter of the holes punched to receive the rivets, and divide the remainder by the pitch of the rivets. The result is the percentage of the strength of the net section of the sheet at the seam, as compared with the strength of the solid part of the same sheet.

Formula B. Multiply the area of the hole filled by the rivet by the number of rows of rivets in the seam, and divide the product by the pitch of the rivets multiplied by the thickness of the sheet. The result is the percentage of the strength of the rivets in the seam, as compared with the strength of the solid part of the sheet.

It is to be assumed that the boiler will fail by fracturing the plates or by shearing the rivets, according as plates or rivets are the weaker; so that in finding the working pressure we take the lowest of the percentages as found by formulæ *A* and *B*, and apply that percentage as the "value of the seam" in the following formula.

Formula C. Multiply the thickness of the boiler plate, expressed in parts of an inch, by the "value of the seam" as obtained above, and again by the ultimate tensile strength of the metal in the plates. Divide the product by the internal radius of the boiler in inches, and by the desired factor of safety. The result is the pressure per square inch at which the safety-valve may be set. (The factor of safety is about 5, or, under certain conditions specified in the statute, it may be as low as 4.)

There is no difficulty in applying this rule to ordinary lap-riveted seams with one, two, or three rows of rivets, all of equal pitch; but in the case of a joint such as is mentioned above, in which some of the rivets are exposed to double shear and others only to single shear, and in which some have a wider pitch than others, it has sometimes been asked what interpretation should be put upon the rule. We give below an example worked out by Mr. John H. Cooper, which appears to us to contain a very fair exposition of the principles involved.

In the joint discussed by Mr. Cooper the arrangement of the parts is as in Fig. 1. The pitch in the double-riveted part is $4\frac{1}{2}$ inches, the outer row of rivets being pitched 9 inches apart. The rivet holes are $1\frac{1}{4}$ inches in diameter, the shell of the boiler is 60 inches in diameter, the rivets are of iron, and the shell plates are of steel $\frac{3}{4}$-inch thick, and having an ultimate tensile strength of 55,000 pounds per square inch. "The remaining proportions of the joint," he says, "were not given; and no other opinion was asked for except as to the working pressure to be allowed on this boiler under the Philadelphia City Ordinance Rules." In order to get the relative area of section of the shell plates through the holes pitched 9 inches apart, we have, in accordance with formula A:

$$(9-1.25) \div 9 = .861.$$

(It is not necessary to calculate this percentage across the other lines of rivet holes, since the joint could not fail by simple fracture along one of these lines unless both the

straps broke; and since the two straps taken together are considerably stronger than the solid plate, it follows that no danger need be apprehended from this source.) The area of the $1\frac{1}{4}$-inch rivet hole being 1.227 sq. in., formula *B* gives us, as the rivet section in the holes of a $4\frac{1}{2}$-inch section of the joint:

$$\frac{1.227 \times 4\frac{1}{2}}{4.5 \times .75} = 1.663.$$

I have taken the number of rivet sections exposed to shear as representing the number of rows of rivets required by the formula. Two rows of rivets, each through three plates, that is, through two outside plates with boiler shell plate between them, will present 4 sections of the rivets to shear in one unit, *a b c d*, of the joint, and the single row through two plates at 9-inch pitch must be counted as a *half a rivet*, since in each alternate unit of the joint, as for instance, within *b*, *e*, *d*, *g*, this rivet does not exist. The result would be the same if we were to take a 9-inch unit of the joint, as *e*, *f*, *g*, *h*, and then include the actual number of rivet sections exposed to shear within this limit; we should then have 9 sections of rivets within 9 lineal inches of the joint, which would give the same result by the formula as $4\frac{1}{2}$ sections in $4\frac{1}{2}$ lineal inches of the joint. Either case fills the intention of the City Rules.

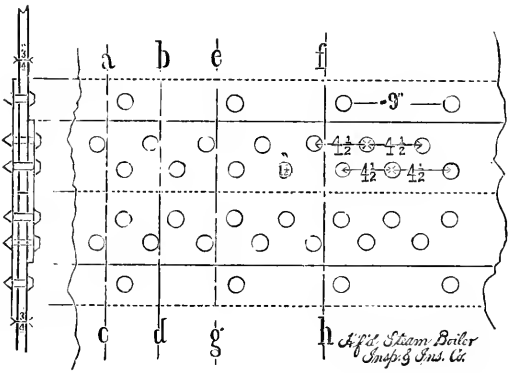

Fig. 1.

We must next understand that the formulæ *A* and *B* of the City Rules do not determine the strength of anything; but they do consider the sectional areas of the two components of the joint, which may be taken to stand for relative strength when all the materials of the joint are homogeneous, having shearing and tensional strength the same; and we are to note that formula *C* also supposes the shearing and tensile strength of the rivets and plates to be exactly the same when they have equal areas exposed to the same strain. Therefore, if we admit a difference in strength of the rivets and plates that make up the joint in question, we must search for the exact figures of each before we can ascertain the true value of *B*.

We see by formula *B* that the rivet section is nearly double the plate section. Now we know that the City Rules do not provide for a composite joint, and therefore, as the steel plates of which this boiler is composed are known to be stronger than the iron rivets which hold them together, it is proper that the rivet section should be proportionately greater than the net section of the perforated plates; but *how much* greater is a matter of many opinions and of diverse results of experiments. If we accept Chief Engineer Shock's experiments on bolts of iron subjected to single and double shear, we may take from his tables 40,700 lbs. per square inch for single shear and 75,300 lbs. per square inch for double shear, which numbers represent the shear, pure and simple, and do not include the uncertain element of friction.

With these figures before us (which are among the lowest on record), we are prepared to find the true value of B, thus:—

The double shear of two rivets, per square inch, = 150,600 lbs.
The single shear of a half rivet, per square inch, = 20,350 "

The sum of which equals - - - - 170,950 lbs.

Opposed to this is a corresponding section of the plate, in a unit of the joint, *a b c d;* 55,000 lbs. per square inch, multiplied by $4\frac{1}{2}$ inches, the length of this unit, equals 247,500 lbs.

The two results just obtained must be placed in formula B in order to give the weaker material the proper additional area of section, thus:—

$$B = \frac{1.227 \times 4.5 \times 170,950}{4.5 \times .75 \times 247,500} = 1.13.$$

We see by this result that the effective rivet section is far beyond the requirement of the plates, and might safely be reduced.

Proceeding now according to City Rule we must take the least of the two results found by formulæ A and B and insert it in formula C, thus:—

$$C = \frac{.75 \times .861 \times 55,000}{30 \times 5} = 237 \text{ lbs.}$$

This result, Mr. Cooper concludes, may be accepted as the working pressure allowed in this boiler; for it is in accordance with the spirit of the City Rule, though it embodies elements which do not lie within the limits of the ordinance.

Mr. Cooper's process, as explained above, seems to us a very proper one, except that we should prefer to use the diameter of the hole filled by the rivet in the place of the diameter of the rivet itself. This has been taken into account in the following example, worked out by Mr. Van Dame, of the Baldwin Locomotive Works:

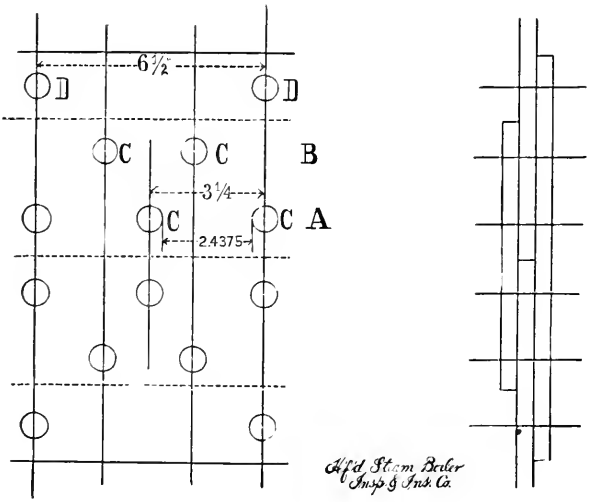

FIG. 2.

In Fig. 2, the dimensions of the joint are as follows: Plates are of steel, 55,000 lbs. tensile strength, and $\frac{3}{8}$ of an inch thick. Rivets are of iron, $\frac{3}{4}$ of an inch in diameter, with a shearing strength of 45,000 lbs. per square inch, and pitched $3\frac{1}{4}$ inches apart in the double-riveted portion, and $6\frac{1}{2}$ inches in the outside row. There are three ways in

which this joint can fail: (1) by double shearing rivets *C C C C*, and single-shearing rivets *D*; (2) by breaking the plate at *B* and shearing the rivets at *E*; (3) by breaking the plate at *E*.

Let us consider a portion of the joint $6\frac{1}{2}$ inches long. The strength of the solid plate in a unit of this length is $6\frac{1}{2} \times \frac{3}{8} \times 55{,}000 = 134{,}062$ lbs. If the joint break in accordance with the first supposition, there are four rivets, *C C C C*, to be double-sheared, and one, *D*, to be single sheared. The diameter of the hole filled by the rivet being, say, $\frac{13}{16}$ of an inch, the sectional area of each rivet is .5185 square inch. Hence,

Shearing strength of *C C C C* = $.5185 \times 4 \times 2 \times 45000 = 139{,}995$ lbs.
Shearing strength of *D* = $.5135 \times 1 \times 45000 = 23{,}332$ lbs.

Strength of joint, on supposition (1), = 163,327 lbs.

On the second supposition we have to break the plate across 4.875 inches, and also shear one rivet.

Tensional strength of plate $4.875 = \times .375 \times 55{,}000 = 100{,}540$ lbs.
Shearing strength of rivet $= .5185 \times 1 \times 45{,}000 = 23{,}332$ lbs.

Strength of joint, on supposition (2), = 123,872 lbs.

On the third supposition we merely have to break the plate across $6.5 - .8125 = 5.6875$ inches.

Tensional strength of plate $= 5.6875 \times .375 \times 55{,}000 = 117{,}150$ lbs.

In accordance with the Philadelphia rule we are to take the least of these three results (which is obviously the last), and divide it by the tensile strength of 6.5 inches of the solid plate, which strength we have already found to be 134,062 lbs. Thus, $117{,}150 \div 134{,}062 = 0.87$. Hence, the joint, in its weakest part, has 87 per cent. of the strength of the solid plate. The remainder of the operation consists simply in the substitution of this number (*i. e.* 0.87) in formula *C*.

Prof. Romanes has been making some interesting observations on a very intelligent female chimpanzee which has been for six years in the menagerie of the Zoölogical Society in London. This ape is able to understand the significance of spoken language to a remarkable extent, though her attempts at vocal response consist only of three different grunting noises, one of which she employs to show assent, one for dissent, and one to express recognition of favors. She has been taught to pick up from the bottom of her cage and deliver to her instructor any number of straws which may be demanded up to five. In counting these small numbers, she rarely makes a mistake; but efforts to teach her to count up to ten have been less successful. She is usually accurate in handing out six or seven straws; but as the numbers run up to eight or nine or ten, she becomes more and more uncertain. It is evident, however, that she understands these sounds to signify numbers larger than those below them; for, when asked for them, she always gives some quantity greater than six and less than eleven. — *New York Sun.*

Drs. Frankel and Piefke, of Berlin, have recently made an exhaustive study of the filtration of drinking water through sand. Their experiments conclusively prove, says the *Medical News*, that the danger of infection from impure water is only slightly reduced by filtration through sand; bacteria passing through at all times, but in larger numbers just after the filter has been cleaned, and again after it has been in use for some time. — *Science.*

Incorporated 1866.

HARTFORD STEAM BOILER INSPECTION AND INSURANCE CO. HARTFORD, CONN.

Charter Perpetual.

Issues Policies of Insurance after a Careful Inspection of the Boilers,

COVERING ALL LOSS OR DAMAGE TO

BOILERS, BUILDINGS, AND MACHINERY.

ALSO COVERING

LOSS OF LIFE AND ACCIDENT TO PERSONS

ARISING FROM

Steam Boiler Explosions.

Full information concerning the plan of the Company's operations can be obtained at the

COMPANY'S OFFICE, HARTFORD, CONN.,

Or at any Agency.

J. M. ALLEN, President. W. B. FRANKLIN, Vice-Prest.
J. B. PIERCE, Secretary. FRANCIS B. ALLEN, 2d Vice-Prest.
E. J. MURPHY, M. E., Consulting Engineer.

Board of Directors.

J. M. ALLEN, President.
FRANK W. CHENEY, Treas. Cheney Brothers Silk Manufacturing Co.
CHARLES M. BEACH, of Beach & Co.
DANIEL PHILLIPS, of Adams Express Co.
RICHARD W. H. JARVIS, Prest. Colt's Fire Arms Manufacturing Co.
THOMAS O. ENDERS, President of the U. S. Bank.
LEVERETT BRAINARD, of The Case, Lockwood & Brainard Co.
GEN. WM. B. FRANKLIN, U. S. Commissioner to the Paris Exposition.
NEWTON CASE, of The Case, Lockwood & Brainard Co.
NELSON HOLLISTER, of State Bank, Hartford.
HON. HENRY C. ROBINSON, Attorney-at-Law, Hartford, Conn.
HON. FRANCIS B. COOLEY, of the National Exchange Bank, Hartford, Conn.
A. W. JILLSON, late Vice-Prest. Phœnix Fire Ins. Co., Hartford, Conn.
EDMUND A. STEDMAN, Treasurer of the Fidelity Co., of Hartford, Conn.
CLAPP SPOONER, Bridgeport, Conn.
GEORGE BURNHAM, Baldwin Locomotive Works, Philadelphia.
HON. NATHANIEL SHIPMAN, Judge United States Circuit Court.

A. S. Ferry, General Agent, Office at Hartford, Conn.

GENERAL AGENTS.	CHIEF INSPECTORS.		OFFICES.
THEO. H. BABCOCK,	R. K. McMURRAY,	NEW YORK CITY.	Office, 285 Broadway.
CORBIN & GOODRICH,	WM. G. PIKE,	PHILADELPHIA.	" 430 Walnut St.
LAWFORD & McKIM,		BALTIMORE, MD.	" 22 So. Holliday St.
C. E. ROBERTS,	WM. U. FAIRBAIRN,	BOSTON, MASS.	" 35 Pemberton Sq.
		PROVIDENCE, R. I.	" 29 Weybosset St.
H. D. P. BIGELOW,	H. D. P. BIGELOW,	CHICAGO, ILL.	" 112 Quincy St.
C. C. GARDINER,		ST. LOUIS, MO.	" 404 Market St.
L. B. PERKINS,	F. S. ALLEN,	HARTFORD.	" 218 Main Street.
W. G. LINEBURGH & SON,	J. H. RANDALL,	BRIDGEPORT.	" 11 Franklin Block.
GEO. P. BURWELL,	C. A. BURWELL,	CLEVELAND.	" 208 Superior St.
MANN & WILSON,	J. B. WARNER,	SAN FRANCISCO.	" 306 Sansome St.
ZOLLARS & McGREW,	T. E. SHEARS,	DENVER, COL.	" Granite Bl'g, Rm's 3, 4.
LEITH & MANLY,	B. F. JOHNSON,	BIRMINGHAM, ALA.	" 2015 First Ave.
W. S. HASTIE & SON,		CHARLESTON, S. C.	" 44 Broad St.

The Locomotive.

PUBLISHED BY THE HARTFORD STEAM BOILER INSPECTION AND INSURANCE COMPANY.

NEW SERIES—VOL. XI. HARTFORD, CONN., OCTOBER, 1890. No. 10.

On the Strength of Triple-Riveted Double Butt-Strap Boiler Joints.

BY JOHN H. COOPER, M.E.

Some discussion having arisen regarding the proper method of computing the strength of a triple-riveted butt-strap boiler joint, in accordance with the Philadelphia rule, an example of such a calculation will be interesting and is here given. The Philadelphia law says that, in estimating the strength of the longitudinal riveted seams in boilers, the following two formulæ shall be applied:

Formula A. From the pitch of the rivets subtract the diameter of the holes punched to receive the rivets, and divide the remainder by the pitch of the rivets. The

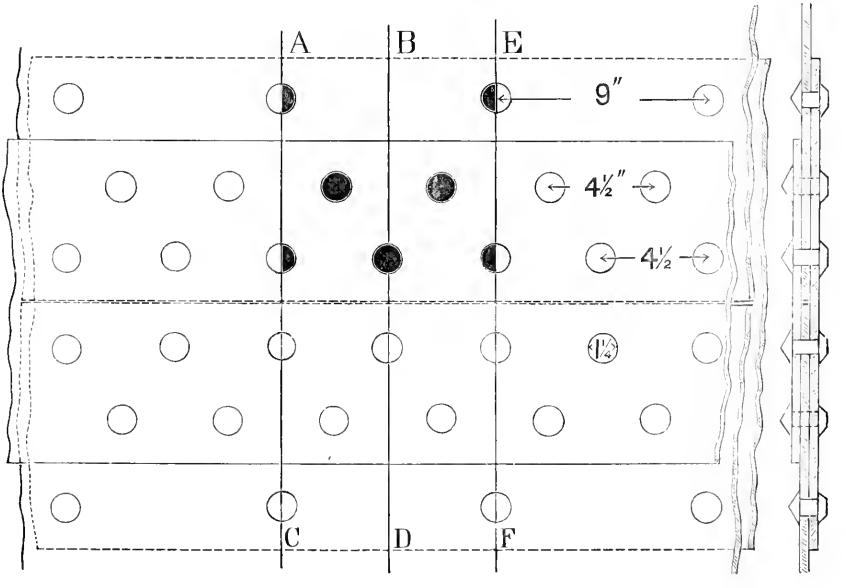

A TRIPLE-RIVETED BUTT-STRAP JOINT.

result is the percentage of the strength of the net section of the sheet at the seam, as compared with the strength of the solid part of the same sheet.

Formula B. Multiply the area of the hole filled by the rivet by the number of rows of rivets in the seam, and divide the product by the pitch of the rivets multiplied by the thickness of the sheet. The result is the percentage of the strength of the rivets in the seam, as compared with the strength of the solid part of the sheet.

It is to be assumed that the boiler will fail by fracturing the plates or by shearing

the rivets, according as plates or rivets are the weaker; so that in finding the working pressure we take the lowest of the percentages as found by formulæ *A* and *B*, and apply that percentage as the "value of the seam" in the following formula.

Formula C. Multiply the thickness of the boiler plate, expressed in parts of an inch, by the "value of the seam" as obtained above, and again by the ultimate tensile strength of the metal in the plates. Divide the product by the internal radius of the boiler in inches, and by the desired factor of safety. The result is the pressure per square inch at which the safety-valve may be set. (The factor of safety is 5, or, under certain conditions specified in the statute, it may be as low as 4.)

There is no difficulty in applying this rule to ordinary lap seams riveted with one, two, or three rows of rivets, all of equal pitch; but in the case of a joint such as is mentioned above, in which some of the rivets are exposed to double shear and others only to single shear, and in which some have a wider pitch than others, it has sometimes been asked what interpretation should be put upon the rule. The accompanying example shows what the proper interpretation should be, in my opinion.

In the joint about to be considered, the arrangement of the parts is as in the cut. The pitch in the double-riveted part is $4\frac{1}{2}$ inches, the outer row of rivets being pitched 9 inches apart. The rivet holes are $1\frac{1}{4}$ inches in diameter, the shell of the boiler is 60 inches in diameter, the rivets are of iron, and the shell plates are of steel $\frac{3}{4}$-inch thick, and having an ultimate tensile strength of 55,000 pounds per square inch. In order to get the relative area of section of the shell plates through the holes pitched 9 inches apart, we have, in accordance with formula *A*:

$$A = \frac{9 - 1.25}{9} = .861.$$

(It is not necessary to calculate this percentage across the other lines of rivet holes, since the joint could not fail by simple fracture along one of these lines unless both the straps broke; and since the two straps taken together are considerably stronger than the solid plate, it follows that no danger need be apprehended from this source.) The area of the $1\frac{1}{4}$-inch rivet hole being 1.227 sq. in., formula *B* gives us, as the rivet section in the holes of a $4\frac{1}{2}$-inch section of the joint, the following:

$$B = \frac{1.227 \times 4.5}{4.5 \times .75} = 1.636.$$

I have taken the number of rivet sections exposed to shear as representing the number of rows of rivets required by the formula. Two rows of rivets, each through three plates, that is, through two outside plates with boiler shell plate between them, will present 4 sections of the rivets to shear in one unit, *A B C D*, of the joint, and the single row through two plates at 9-inch pitch must be counted as a *half a rivet*. The result would be the same if we were to take a 9-inch unit of the joint, as *A E C F*, and then include the actual number of rivet sections exposed to shear within this limit; we should then have 9 sections of rivets within 9 lineal inches of the joint, which would give the same result by the formula as $4\frac{1}{2}$ sections in $4\frac{1}{2}$ lineal inches of the joint. Either case fills the intention of the City Rules.

We must next understand that formulæ *A* and *B* of the City Rules do not determine the strength of anything; but they do consider the sectional areas of the two components of the joint, which may be taken to stand for relative strength when all the materials of the joint are homogeneous, having shearing and tensional strength the same; and we are to note that formula *C* also supposes the shearing and tensile strength of the rivets and plates to be exactly the same when they have equal areas exposed to the same strain. Therefore, if we admit a difference in strength of the rivets and plates that make up the joint in question, we must search for the exact figures of each before we can ascertain the true value of *B*.

We see by formula B that the rivet section is nearly double the plate section. Now we know that the City Rules do not provide for a composite joint, and therefore, as the steel plates of which this boiler is composed are known to be stronger than the iron rivets which hold them together, it is proper that the rivet section should be proportionately greater than the net section of the perforated plates; but *how much* greater is a matter of many opinions and of diverse results of experiments. If we accept Chief Engineer Shock's experiments on bolts of iron subjected to single and double shear, we may take from his tables 40,700 lbs. per square inch for single shear and 75,300 lbs. per square inch for double shear, which numbers represent the shear, pure and simple, and do not include the uncertain element of friction.

With these figures before us (which are among the lowest on record), we are prepared to find the true value of B, thus:—

The double shear of two rivets, per square inch,	= 150,600 lbs.
The single shear of a half rivet, per square inch,	= 20,350 "
The sum of which equals - - - -	170,950 lbs.

Opposed to this is a corresponding section of the plate, in a unit of the joint, $A\ B\ C\ D$; 55,000 lbs. per square inch, multiplied by $4\frac{1}{2}$ inches, the length of this unit, equals 247,500 lbs.

The two results just obtained must be placed in formula B in order to give the weaker material the proper additional area of section, thus:—

$$B = \frac{1.227 \times 4.5 \times 170,950}{4.5 \times .75 \times 247,500} = 1.13.$$

We see by this result that the effective rivet section is far beyond the requirement of the plates, and might safely be reduced.

Proceeding now according to City Rule we must take the least of the two results found by formulæ A and B and insert it in formula C, thus:—

$$C = \frac{.75 \times .861 \times 55,000}{30 \times 5} = 237 \text{ lbs.}$$

This result may be accepted as the working pressure allowed in this boiler; for it is in accordance with the spirit of the City Rule, although it embodies elements that do not lie within the limits of the ordinance.

Inspectors' Reports.

JUNE, 1890.

During this month our inspectors made 5,099 inspection trips, visited 9,448 boilers, inspected 4,172 both internally and externally, and subjected 646 to hydrostatic pressure. The whole number of defects reported reached 11,277, of which 888 were considered dangerous; 24 boilers were regarded unsafe for further use. Our usual summary is given below:

Nature of Defects.	Whole Number.	Dangerous.
Cases of deposit of sediment,	623	34
Cases of incrustation and scale,	1,082	29
Cases of internal grooving,	69	17
Cases of internal corrosion,	468	42
Cases of external corrosion,	827	39
Broken and loose braces and stays,	89	24

Nature of Defects.	Whole Number.	Dangerous.
Settings defective,	338	26
Furnaces out of shape,	376	15
Fractured plates,	108	31
Burned plates,	176	19
Blistered plates,	323	9
Cases of defective riveting,	2,065	20
Defective heads,	70	18
Serious leakage around tube ends,	2,791	216
Serious leakage at seams,	479	27
Defective water-gauges,	354	60
Defective blow-offs,	92	15
Cases of deficiency of water,	26	10
Safety-valves overloaded,	43	8
Safety-valves defective in construction,	57	23
Pressure-gauges defective,	255	21
Boilers without pressure-gauges,	33	33
Unclassified defects,	533	152
Total,	11,277	888

Boiler Explosions.

JULY, 1890.

PLEASURE YACHT (115). On July 8th, the Hon. Sam Blake passed down the St. Lawrence River, near Kingston, Ont., in a small steam yacht, accompanied by his son and two London gentlemen. When opposite Gananoque a serious accident occurred. Mr. Blake was at the wheel, and the pilot was giving him instructions how to reach Jack-straw Light, when suddenly the boiler exploded with a loud noise. Mr. Blake was thrown upon his back by the shock, and the naphtha burnt the pilot's hands, but not seriously. None of the others were injured. There were two barrels of naphtha in the tank at the time, and had it become ignited there would have been none of the tourists left to tell the tale. As it was, the engine was ruined and the wood-work torn considerably. The yacht was towed to Gananoque, where she was shipped back to Toronto.

PORTABLE SAW-MILL (116). A portable boiler of about twelve-horse power blew up on July 9th, about four miles southeast of Cadillac, Mich., in the woods, where it was being used to saw stove-wood. There were only two men in the vicinity of the boiler at the time of the explosion, both of whom will die. One, William Call, was on the top of the boiler examining it when it exploded. The boiler was blown to atoms, large portions being found seventy-five feet from the trucks. The other man hurt was Charles Brock, who was struck by a piece of the boiler. A third man, who was assisting in the sawing, fortunately escaped, being some distance from the engine, engaged in drawing a bucket of water.

SAW-MILL (?) (117). Dr. Goodson and A. S. Montrose were killed by a boiler-explosion on July 15th, at Bodie, near Bridgeport, Cal.

IRON FOUNDRY (118). Frederick Rosenaw and Peter Scollins were scalded to death on July 19th by a boiler-explosion, in the iron foundry of Cassidy & Adler, New York city.

Portable Engine (119). On July 21st, a boiler in a barn owned by Charles Jones, No. 560 Eagle Avenue, New York, exploded, and a number of persons were badly injured. The barn was wrecked, as was a two-story tenement-house near by. The loss on the house is said to be $2,000, and the damage to the barn $600. Nicholas Lillo was severely injured, and also Annie Letting.

Threshing Machine (120). The boiler of Frazier's threshing outfit exploded on July 22d, a mile west of Miles' station, on the Pacific Coast Railway, fatally scalding Fireman John T. Pryo, who died a few hours after, fatally injuring a sack-sewer named Walter Kyle, who will probably die, and severely injuring Engineer Ed. T. Frazier. Pryo and Frazier were blown from the rear of the engine along the ground one hundred yards, and a part of the engine, weighing over three tons, was launched like a rocket over the heads of the gang at the separator, being thrown 125 feet.

Flouring-Mill (121). The flouring-mill of Mead Bros., at North Jackson, O., was completely wrecked on July 23d, by the explosion of a boiler. D. Mead, the engineer, and William Thomas, an employee, were killed instantly, and William Mikesell fatally injured.

Stone Quarry (122). At Sand Creek stone quarry, on July 30th, a twelve-horse power boiler exploded with terrific force. John Paugh, thirty-seven years old, was thrown seventy feet, and instantly killed. Ed. Wallace, the engineer, was thrown some distance, and severely scalded and bruised. He will die. Five other men, stone-cutters, were more or less injured. The boiler was hurled fifty feet.

August, 1890.

Saw-Mill (123). The boiler of a saw-mill on John McFarland's place, ten miles west of Danville, Ill., exploded on August 1st. C. Chester, a young man, was instantly killed. His father, John Chester, received fatal injuries. The engineer, D. Williams, had his leg torn off.

Fibre Works (124). The newly-built mill of the Fibre Company at Riverside, near the village of Turner's Falls, Mass., was wrecked by an explosion on August 1st, and three men were buried in the ruins. The cause of the explosion is unknown. The money loss, it is said, will amount to several thousand dollars.

Pumping Station (125). Advices from Easton, Pa., state that the boiler in the pump-house along the Delaware River, used to force water to Paxinosa Inn, on the top of the Weygat Mountain, half a mile distant, exploded on Aug. 2d, a portion of the boiler striking Joseph Werkheiser, who was passing at the time, breaking his arm and fracturing his skull. Another part was blown across the river, and tore up a portion of the Pennsylvania Railroad tracks. The engineer escaped.

Sugar Refinery (126). The explosion of a boiler at the American Sugar Refinery of San Francisco, on Aug. 3d, resulted in the serious injury of Ernest Goetz, a workman employed about the place. There was no damage to the building.

Coal Pockets (127). On August 5th, fire destroyed the coal pockets of James Robertson's coal yard, Port Jervis, N. Y., and caused the explosion of the boiler used to furnish power.

Saw-Mill (128). By the explosion of a boiler in Clark & Sizer's saw-mill, near Elliston, Mont., on August 6th, G. S. Keegan was instantly killed, James Conniff and

George Mitchell fatally injured, and ten others more or less hurt. The mill was totally wrecked.

LOCOMOTIVE (129). A crown sheet of a switch engine in the Georgia Pacific Railroad yards, Birmingham, Ala., gave way, on August 7th, causing an explosion of the boiler. The engine was standing still at the time, but engineer William Davidson and Fireman William Black were at their posts in the cab. Engineer Davidson was hurled through the cab window and thrown across a box car, landing on the ground twenty-five feet from his engine. He was badly burned by escaping steam, and rendered unconscious by the shock. His injuries are serious, but not fatal. Fireman Black was hurled to the back part of the tender, and completely enveloped by the escaping steam. He will probably die. The engine was wrecked, but no other damage was done.

SAW-MILL (130). The boiler in John Jacoby's saw-will, at Mulberry, thirteen miles east of Lafayette, Ind., exploded on Aug. 7th, with terrific force, demolishing the mill and causing death and destruction. James Shoemaker, engineer, was instantly killed. John Jacoby, proprietor, was injured about the head, and will die. Albin Jacoby and George Keiger were badly injured, but will recover. Miss Collins, who resides just across the street from the mill, was struck by a piece of iron, and her leg was broken just above the knee. The cause of the explosion has not been learned.

SAW-MILL (131). On August 7th, at Franklin, Ind., the boiler in the saw-mill of J. W. Landis exploded, tearing to pieces the south end of the mill, and badly wrecking the machinery. Tom Spears, a workman, was struck on the head by a flying board, and was slightly hurt. He was the only one about the mill who was injured. The boiler was of one-fourth inch steel, and had been in use barely two years. September 26, 1888, the boiler in the same mill exploded, and the engineer, John Cheatham, was killed. During the past four years Franklin has had four boiler explosions.

COAST STEAMER (132). On August 13th, the steamer *Eleanora*, belonging to the Maine Steamship Company, left Portland, Me., for New York. When off Portland Head she suddenly stopped, and a loud report, followed by a cloud of steam from the engine hatch, revealed the fact that one of her boiler-plates had blown out. The steamer was towed into Portland for repairs.

SAW-MILL (133). A terrible boiler explosion occurred on August 14th, twelve miles from Newberry, S. C., at E. P. Matthews' saw-mill. P. P. Matthews, a son of the proprietor of the mill, was literally blown to pieces. Three negro men were instantly killed and two others wounded, one seriously. The water was low in the boiler, and the engine was stopped for it to be filled, when the explosion occurred. The explosion was heard a distance of twelve miles.

SAW-MILL (134). A terrible explosion took place at George Hoy's saw-mill, near Hurricane Hill, five miles north of Dyersburg, Tenn., on August 15th (?), by which three men were instantly killed and four others seriously wounded. Two mules were likewise killed by a flying piece of pipe.

LOCOMOTIVE (135). The North Shore limited, on the Michigan Central Railroad, was badly wrecked on August 15th, at Augusta, Mich. The engine struck a protruding car of a freight train, which had been side-tracked, and jumped the track and crashed into the depot, completely wrecking the building. Two boys who were inside were killed. After striking the building the engine exploded, instantly killing Engineer McRoberts and Fireman Gregg.

POWER STATION (?) (136). By an explosion at the Callahan power building, in Dayton, O., on August 18th, Timothy McNamara, the engineer, was badly scalded. A defective blow-off was the cause of the accident.

PORTABLE ENGINE (137). A terrific boiler explosion took place at the corner of Fourth and N Streets, Lincoln, Neb., on August 18th, that resulted in the death of Charles Deneen and Columbus Maggard and the maiming of Henry Leeding. The boiler was used for lowering material to workmen who were employed on the gas company's new works.

PUMPING ENGINE (138). An explosion occurred on August 19th, at Watkins, Colo., on the line of the Kansas Pacific Railway. The boiler was an upright, and was used by the railway company for pumping purposes. It was torn to pieces, and the engineer badly injured. The boiler-plates had thinned down from excessive internal corrosion, and gave way with ordinary pressure.

SAW-MILL (139). The White flouring and saw-mill, at Pike's Peak, Ind., was completely demolished by a boiler explosion, on August 23d. Four men were fatally, and eight others seriously, injured.

MINE (140). The boiler at the Magna Charta tunnel, at Tomichi, Colo., exploded on August 26th, killing the night engineer, Dick Metzer. The miners, who were at work in the breast of the tunnel, 300 feet away, rushed out and found his dead body. The accident will greatly delay work on this great tunnel, as it will probably be necessary to obtain and place a new boiler in position, and as the tunnel was being driven entirely by compressed-air drills no work can be done until another boiler is placed.

LOCOMOTIVE (141). The boiler of a locomotive on a freight train on the New York, Pennsylvania & Ohio Railroad exploded on August 27th, while the train was running six miles east of Mansfield, O. Engineer Albert Graham and Fireman Joseph Murphy were instantly killed. Fire was communicated to all cars in the train, and fifteen of them were destroyed.

STEAM TUG (142). By an explosion on the steam tug *W. F. Burton*, on August 31st, Nicholas Van Schaick, the engineer, was badly scalded. The tug was on her way from New York city to Harlem Bridge at the time, and the head of the boiler blew off opposite Forty-sixth Street.

ELECTRIC LIGHTING STATION (143). The main steam pipe between the Columbus (Ohio) Electric Lighting Company's boilers burst on August 31st, severely scalding B. F. Huntsberry, the engineer.

The Pacific Coast, 1847-1890.

In the latter part of the year 1847, the good ship *Sweden*, commanded by the late William Nott, sailed from New York, carrying United States troops and supplies to the rarely visited ports of Monterey and San Francisco, in California, which was then lately acquired by the United States, as one of the results of our war with Mexico. Since that voyage of the *Sweden*, great changes have taken place, greatly facilitating transportation by water everywhere; but we can here only mention one. The screw propeller for steam vessels, unknown in our waters till about the year 1855, has for many years past nearly supplanted the side-wheel steamer, to the great benefit of commerce. The rise and progress of the business of the Pacific coast since the discovery of gold at San Francisco, soon after 1847, and its present magnitude, are among the marvels of

these later years, and even a severely condensed history of the case would be too long to give in the LOCOMOTIVE. We will therefore give only a few notes on the subject, taken from the San Francisco *Commercial News* for the year ending July 1, 1890, as follows: "The value of breadstuffs alone, exported by the California wheat fleet, was $23,536,234, requiring 284 vessels of the largest class, of which, by the way, only 55 were American, the rest being mostly British. The Tacoma grain fleet required 19 vessels, and the export lumber trade of the coast required 230 vessels. The northern grain and salmon fleet numbered fifty-three vessels — in all 586 large vessels carrying exports to distant places. The whaling fleet of San Francisco and the New Bedford whaling fleet of San Francisco numbered over 40 vessels. Nearly all the exports, except the lumber, which went mainly to South America and to British colonies, went to British and other European ports and to British colonies." These are some of the evidences of the present extent of the Pacific coast business. The marvelous growth of the railroad system, and the increase everywhere, in these later years, of the use of steam power, have been two of the great factors by which the once rarely-visited northwest coast, now better known as the Pacific coast, has been made to yield good fruits bountifully, and become the home of a vast and prosperous people, with large and growing cities and villages, closely connected by telegraphs and railroads with the Atlantic coast, so that the continent is traversed by passengers and mails in five days. And all this and much more untold has come to pass since the writer had to wait over seven months for news, which then came by way of China and England, of the arrival in port of the ship *Sweden* on the afore-mentioned voyage of the year 1847.— *Samuel Nott, C. E.*

The First Sextant.

The successful application of the art of navigation depends almost as much on the skill of the artists who construct the instruments employed, as on that of the observer who uses them. Many of the practical problems in daily use in the navigation of our modern ships were known to our forefathers, but the imperfections of the instruments at their command prevented their making any great use of them; indeed, it is well known to those who have access to old works on navigation, that scarcely anything really new has been brought into practice during the last century, and we are simply in most cases only availing ourselves of our superior instruments to bring into practical use what to our ancestors was merely theory. The three chief instruments employed in navigation are the compass, sextant, and chronometer. Of the history of the last we gave a sketch in a former number, and we propose in a similar way to now describe the invention of the sextant. To understand the great improvement which this invention made in the art of navigation we must realize the kind of instrument in use before Hadley's discovery in 1731. The most careful of the navigators of those days were provided with either the back-staff, invented by Davis in 1590, or the astrolabe, an instrument of very great antiquity. The astrolabe was a circular metal disk, held in one hand in a vertical position by a ring, from which was suspended a plumb line, the upper left hand quadrant was graduated, and a rod having a round hole at each end worked on a pivot at the center of the disk.

In taking an altitude of the sun the instrument was held so that the plumb-line was over the center of the disk, and the rod moved until the eye at the lower end saw the sun through the hole at the upper end, when the altitude could be roughly read off, anything less than half degrees being estimated. Davis' back-staff (familiarly termed the "hog's yoke") was a better instrument. In using this the observer turned his back

to the sun, and moved a small vane traversing a circular wooden arc until its shadow fell on another vane kept pointed at the horizon. With such rough instruments as these it is not surprising that most sailors preferred their dead reckoning to their astronomical positions, and regarded any attempt at finding the longitude as hopeless, although theoretically the "lunar" had been known for nearly two centuries. Sir Isaac Newton appears to have been one of the first to see the advantage of applying the laws of reflection from glass surfaces to the construction of an instrument capable of measuring angles between objects in any plane whatever, and, doubtless from the manuscripts he left, had his life been prolonged the great honor of the invention would have rested with him. As it was the same idea appears to have been independently worked out practically by Hadley, a gentleman of scientific tastes and considerable means in England; and at the same time by Godfrey, a working glazier in Philadelphia. How strange that such a valuable idea should have occurred to two people at the same time! Hadley's quadrant was very similar to the instrument now in use, except that the telescope was at first placed parallel to a radius of the arc, and when pointed to the horizon the limb of the quadrant was held in an upright position. Hadley (who is also known to sailors by his theory of the trade winds) having perfected his instrument, read a description of it before the Royal Society, and the great value of the invention being at once recognized by Halley, the Astronomer Royal, it was by him brought to the notice of the Admiralty, who ordered a trial of it to be made at sea, Hadley with his two brothers and some members of the Royal Society embarking for that purpose in the *Chatham*, a cutter of 60 tons.

For several days, in at times rough weather, they cruised at the mouth of the Thames, taking many altitudes of the sun, which were compared with calculated altitudes depending upon the times of observation, and the results as preserved in the proceedings of the Royal Society show marvellous accord. It was a curious coincidence that the invention of the quadrant, which for the first time rendered possible the finding of longitude by lunar, should have been almost simultaneous with that of the chronometer, which soon rendered the lunar method superfluous. Harrison's chronometer in 1735 introduced a new and more accurate means of determining a ship's position, and forms, as we said, another of the trio of instruments on which modern navigation may be said to rest. But few alterations have been made in the form of the sextant since Hadley's time. The arc has been increased in length, so that instead of only measuring an angle of 90 degrees, as implied by the name "quadrant," modern "sextants," as they are termed, usually measure to about 130 degrees, and the arrangement for taking the "back" observation, or supplement of the altitude, has been abandoned. In other respects the modern instruments resemble their ancient prototype, and it speaks volumes for the sagacity of an inventor who could provide for the numerous purposes to which his invention has been applied during the last century and a half. The sextant, owing probably to its greater cost, did not come into general use for some years, and in works on navigation fifty years later the astrolabe is still described. A beautiful specimen of that ancient instrument, used by Sir Francis Drake, is preserved in the museum of the Royal Naval College at Greenwich.—[Quoted from *Liverpool Journal of Commerce*, in *San Francisco Commercial News*, and contributed to THE LOCOMOTIVE by Mr. Samuel Nott, C. E.]

The Locomotive.

HARTFORD, OCTOBER 15, 1890.

J. M. ALLEN, *Editor.* A. D. RISTEEN, *Associate Editor.*

THE LOCOMOTIVE *can be obtained free by calling at any of the company's agencies.*
Subscription price 50 *cents per year when mailed from this office.*
Bound volumes one dollar each.

Papers that borrow cuts from us will do us a favor if they will plainly mark them in returning, so that we may give proper credit on our books.

IN the September issue of THE LOCOMOTIVE we published an article on "The Strength of Triple-Riveted Double Butt-Strap Boiler Joints," giving two methods of solving the problem, one by Mr. John H. Cooper, and the other by Mr. Van Clain of the Baldwin Locomotive Works. We intend to have all the matter that is published in this paper correct in every particular; but in the article referred to, we regret to say, there are several errors of arithmetic and one error of statement. For instance, on page 142 we said that "Mr. Cooper's process, as explained above, seems to us a very proper one, except that we should prefer to use the diameter of the hole filled by the rivet in the place of the diameter of the rivet itself." Now a careful reading of the article shows that Mr. Cooper *has* used the diameter of the hole, so that the foregoing sentence does him an injustice that we hasten to correct. In fact, Mr. Cooper has at all times endeavored to draw the attention of others to the propriety of using the area of the hole rather than that of the rivet. (See, for instance, our issue for July, 1889, p. 104.) In explanation of the error, we may say that the article was set up in vacation-time, while the editor was away, and that the proof of it was accidentally returned to the printing-office without being corrected.

THE article on page 151, and the one on page 152 entitled "*The Pacific Coast from* 1847 *to* 1890," were contributed by the veteran civil engineer, Samuel Nott of this city, who has from time to time contributed interesting articles on early railroading in New England. Captain William Nott, commander of the good ship *Sweden*, was his brother.

IN putting on man-hole covers after an inspection, or when a heating boiler is put together for use in the fall, the nuts have to be screwed up cold; and afterwards, when steam is on, they usually have to be set up still further to keep the joints tight. It is well, therefore, to have a wrench handy about the boiler, so that it can be had without delay when it is needed. The wisdom of this seems very manifest, but in our experience we find many boilers without any such provision, and often we have known the packing to blow out while the fireman has gone somewhere to borrow the necessary wrench; the result being that the boiler has to be shut down again and a new gasket put in.

Mankind seems to have a strong and incurable habit of borrowing wrenches, and even when a wrench has been given the fireman, it often happens that when he needs it most, he finds that some estimable neighbor has spirited it away. Now a blacksmith can make a very serviceable wrench out of a piece of bar iron, in a few minutes, by bending the end of it thus: ____┐, so that the crook fits over the nut on the man-hole frame.

In many cases it may be necessary to make an offset in the handle in order to get at the nut, but that is readily done. The advantages of having a wrench of this kind are, that it is at once cheap and efficient, and that since it will fit only one size of nuts, our well-meaning neighbors are not likely to have use for it.

SOME time ago we announced that the trustees of the estate of the late Sir Joseph Whitworth had presented to Owens College, Manchester, Eng., an engineering laboratory containing among other things a triple expansion engine designed especially for experimental work. Professor Osborne Reynolds has executed a series of trials of this engine, under varying conditions, the results of which are given in No. 99 of Van Nostrand's *Science Series*, under the title *Triple-Expansion Engines and Engine Trials.* We have read this little work with pleasure and profit, and find that it contains much that is both useful and suggestive. Prof. Reynolds's paper is not given in full, but only such portions are omitted as were considered to be of no interest to American readers.

MESSRS. John Wiley & Sons announce that they have in press a new work on valve gears, which will appear shortly.

Concerning Diamonds and Other Precious Stones.

Mr. George F. Kunz recently delivered an interesting lecture on precious stones before the Franklin Institute, in the course of which he spoke of the difficulty that had been experienced at the Kimberley mines in South Africa, in preventing workmen from stealing the gems. Over nine tons of diamonds have been taken from these mines, in all, and it might be thought, perhaps, that the company operating them could afford to wink at an occasional theft of one or two stones; but the expense of working the mines is so great, and the stealing was carried on to such an extent, that the company found it necessary to protect itself by the greatest watchfulness. As Mr. Kunz says, "It became a question at one time whether the mines could be profitably worked, when from one-fifth to one-quarter of all the yield never reached the proper owners, as the native diggers swallowed and concealed the diamonds in every possible way. It became necessary for the companies, in self-defense, to take extraordinary precautions against this great loss. Overseers or special searchers were appointed, who made a most thorough examination of all who left the mines." He went on to say that "the natives use most ingenious methods for the concealment of the gems. On one occasion some officers, suspecting that a Kaffir had stolen diamonds, gave chase, and caught up with him just after he had shot one of his oxen. No diamonds were found upon the Kaffir, it is needless to say, for he had charged his gun with them, and after the disappearance of the officers he dug them out of his dead ox. Diamonds have been fed to chickens; and a post-mortem examination held a few years ago over the body of a Kaffir revealed the fact that death had been caused by a sixty-carat diamond that he had swallowed."

Of course, many theories have been advanced to explain the formation of the diamond, the best of which is, perhaps, the one that considers them the result of a decomposition of some carbon compound by the action of steam and pressure. Roscoe has examined the diamond-bearing rocks of South Africa, and endeavored to find some material confirmation of this theory. "He noticed a peculiar odor, somewhat like that of camphor," said Mr. Kunz, "which was evolved on treating the soft blue diamond

earth with hot water. A quantity of this earth he powdered and digested with ether, and, on filtering and allowing the ether to evaporate, he obtained a small quantity of a strongly aromatic body, crystalline, volatile, burning easily, with a smoky flame, and melting at about 50° Centigrade (122° Fah.). Unfortunately, the quantity obtained was too small to admit of a full investigation of its composition and properties. He suggested that perhaps the diamond was formed from a hydro-carbon simultaneously with the aromatic body."

The lecturer gave a great variety of other interesting information, among other things referring to the remarkable discovery of sapphires made in the Zenskar range of the Himalayas, in 1882, near the line of perpetual snow. These, he said, were first used by the natives as gun-flints (!), as many as a hundred-weight of them being found in the possession of a single individual.

The Process of Digestion.

The process of digestion is not yet fully understood even by the most learned physiologists. Experimental digestion differs not a little from normal digestion. In digesting meat in a vessel, the pepsin, by means of which the process is carried on, remains unchanged in amount, while in the stomach the glands are constantly pouring out a fresh supply.

Besides, as Professor Chittenden of Yale University says, "It is always to be borne in mind that the living alimentary tract differs much from a glass beaker, and that, in the living subject, we have to deal with a complication of conditions not met with in artificial digestion."

The digestive secretions are saliva, gastric juice, and the pancreatic fluid. The bile, which is sometimes reckoned with these, simply neutralizes the acidity of the contents of the stomach when they pass into the duodenum, aids in emulsifying fat, and promotes the peristaltic motion of the intestines.

The digestive principle in saliva is called *ptyaline*. This substance changes starch into grape-sugar. It is slightly alkaline, yet a strong alkali arrests its action. This is one reason why bread which contains too much soda is unwholesome. Acid impairs the digestive power of the saliva, which is greatly weakened, for example, by an acid condition of the mouth, which characterizes some forms of dyspepsia.

As the normal condition of the stomach, after the proper stomach digestion begins, is an acid one, the digestion of starch is arrested within about five minutes after it reaches the stomach. This fact suggests the importance of slowly and thoroughly masticating bread and all starchy foods.

A principle called *diastase*, obtained from malt, nearly identical with ptyaline, is sold by druggists, and is highly recommended by some physicians; but by other physicians it is regarded as wholly useless for the purpose for which it is prescribed, since it is destroyed by the acid of the stomach.

The essential principles in gastric juice are pepsin and an acid. The normal acid is hydrochloric, otherwise known as muriatic. The action of gastric juice is confined mainly to albuminous foods, such as eggs, meat, fish, peas, beans, and cabbage. Alkali hinders gastric digestion.

In some forms of dyspepsia acids of fermentation are found, giving rise to intense acidity of the stomach. To relieve this, many persons are in the habit of taking large quantities of cooking soda. The relief is not only temporary, but the evil is actually increased.

The pancreatic juice contains a principle resembling ptyaline, but much stronger than that substance, and one resembling weak pepsin. It also unites with bile in emulsifying fat. It thus rounds out and completes the digestive process. — *Youth's Companion.*

On the Strains in Single Riveted Joints.

In the course of some recent correspondence between this office and Mr. James E. Howard, of the Watertown Arsenal, some points concerning the shape of test pieces of boiler plate, and the distribution of strains in single riveted joints, were discussed, which may be of interest to readers of the LOCOMOTIVE.

Tests made at the Arsenal are executed upon strips ten inches long and an inch and a half wide, and of the thickness of the plate as rolled. Strips of these dimensions compare well with larger specimens, say 5 or 8 inches wide, and 15 or 20 inches long. Substantially the same results are obtained, whether the specimens have enlarged ends or parallel sides. Inasmuch as strips of the dimensions given above (*i. e.* $10'' \times 1\frac{1}{2}''$) appear to allow unrestricted flow of the metal, so far as form is concerned, it seems fair to consider that they represent the true qualities of the material, and that the indications that they give are entitled to confidence in designing riveted joints or other built-up forms.

The strength per unit of area, along the net section in a riveted joint, depends upon a number of conditions which vary considerably in different joints, so that the tensile

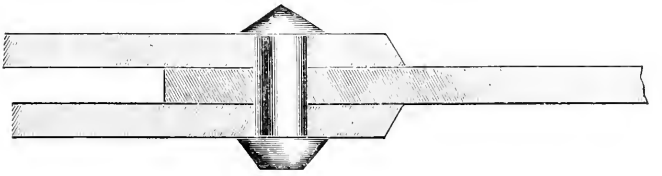

FIG. 1.

strength of the net section in some joints largely exceeds that of the strip, and in others falls far below it. The conditions in perforated test specimens are in some respects quite similar to those existing in a joint; but yet there is enough difference to cause

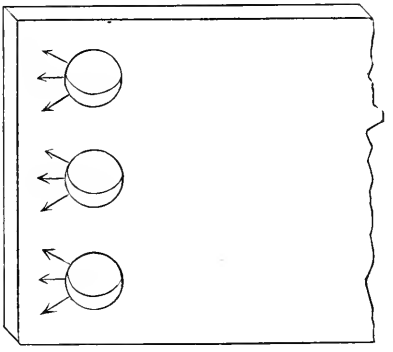

FIG. 2.

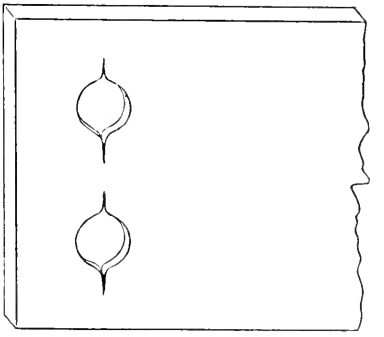

FIG. 3.

them, in many cases, to give results appreciably different from those obtained from the joints themselves.

The simplest form in which a joint can be studied seems to be that represented in

Fig. 1, where an annealed steel plate with drilled holes is riveted between two other plates, using one line of rivets. This corresponds to one-half of a single riveted butt joint, in which the covers are extended to a sufficient distance to be grasped in the jaws of the testing machine. In this joint we eliminate many of the influences which tend to complicate the study of most other joints. The stresses radiate from the rivet holes, as in Fig. 2; the metal about the holes is left in its normal condition, on account of using drilled holes; and there is no bending of the plate as in a lap joint.

It will be seen that in pulling against the rivet holes we change the conditions from a perforated plate in which the stresses pass by the holes. To take an exaggerated case for illustration, suppose we had an excessively wide pitch of rivets as in Fig. 3, and a

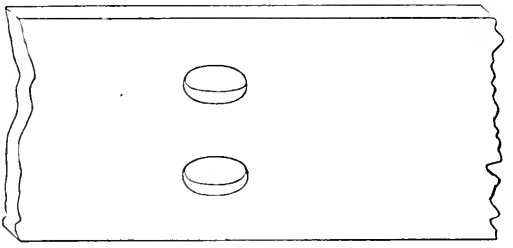

FIG. 4.

correspondingly perforated plate, as in Fig. 4. The concentration of stress at the rivet holes in the one case would tend to cause fracture in detail, the metal first separating at the sides of the holes and then tearing across; whereas, in the perforated plate, the percentage of metal removed being small, the stress on the net section would remain substantially uniform.

If the rivet holes are punched, and the pitch very close, the cold hardening of the punching might impart increased strength to the entire net section; while in a wider

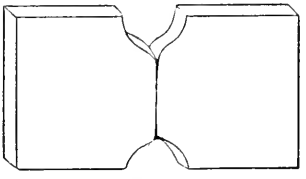

FIG. 5.

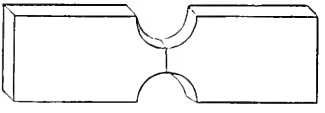

FIG. 6.

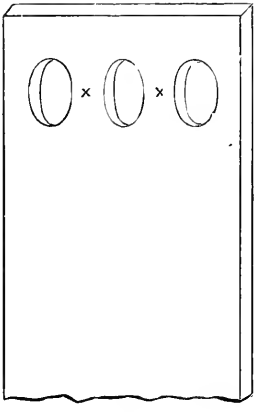

FIG. 7.

pitch, the punching would be an element of weakness by destroying a part of the ductility of the plate at the points where this ductility is most needed. These same considerations apply to wide and narrow grooved specimens. (See Figs. 5 and 6.) The narrow one has the entire net section re-enforced by the surrounding metal, while the wider specimen merely begins to tear out at the edges on account of the larger, and con-

sequently more rigid section of metal on either side of the groove. (Of course it will be understood that all these effects are exaggerated in the cuts.)

A riveted joint gives the best result when the net section is most re-enforced by the solid section of the plate, or when the stress is substantially uniform over the net section extending from rivet hole to rivet hole.

When rivet holes are enlarged, the metal is stretched more at the sides of the holes than at the middle of the pitch (*i. e.* at × × in Fig. 7), and a metal which in the tensile strip shows a large stretch near the maximum load with a small change in the load, seems particularly well adapted to distribute the stress from the rivet hole to the middle of the net section. In case this is an important point it will be readily seen what a variety of conditions we may have in different grades of metal.

The foregoing are some of the considerations which make a simple joint appear complicated when it is examined closely. There are numerous other considerations of a similar nature, one of which is the effect of temperature on the strength of the metal. Tests have been made at Watertown at 200°, 250°, 300°, 350°, 400°, 500°, 600°, and 700°, Fah., the highest strength being found in the neighborhood of 500° Fah.

Old Style and New Style.

The Julian calendar was in use throughout the civilized world from the time of Julius Cæsar, about half a century before Christ, until the year 1582. It was generally known that this calendar made the year too long, — the excess was about three days in four hundred years, — so that any given date had moved forward, by the end of the sixteenth century, about ten days.

To correct this error and make the course of the year correspond with the course of the sun, Pope Gregory XIII ordered ten days to be dropped, from the 4th to the 15th of October, and provided against any variation in the future by giving the year its due length, and nothing more. This was done by decreeing that years divisible by one hundred should not be leap-years, except those which are divisible by four hundred. Thus, the years 1900 and 2100 will not be leap-years, but the year 2000 will be.

The suggestion of the Pope was immediately acted upon by most Catholic nations; but, in 1582, under Queen Elizabeth, the relations between England and Rome were not cordial. The "New Style," as it was called, was adopted in Scotland in 1600, but in England it was not until 1752 that Gregory's calendar was adopted. At that time the necessary correction had grown to eleven days.

Russia still holds to the "Old Style," and the difference between the two styles has increased to twelve days.

There is one thing to be kept in mind, as we read of the festivals which were observed in England and in these Colonies before 1752. Most of our literature relating to May Day, for example, is of that early period, or is traditional in its character. Tennyson speaks of it very much as Milton did, and Milton follows the account given by Chaucer. In reality, those earlier poets were describing a day which corresponds with a later day of May — from the 8th to the 10th. It is, perhaps, from this circumstance that we have the impression that spring used to come earlier, and with a more genial air.

The same caution is to be observed in regard to the old-time Christmas season. Only a little more than a hundred years ago people here and in England kept the festival, so far as it was observed at all, on what is now called the fourth day of January. — *Youth's Companion.*

Incorporated 1866.

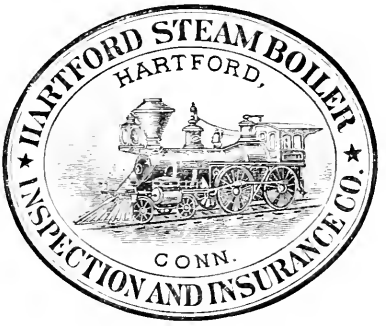

Charter Perpetual.

Issues Policies of Insurance after a Careful Inspection of the Boilers,

COVERING ALL LOSS OR DAMAGE TO

BOILERS, BUILDINGS, AND MACHINERY.

ALSO COVERING

LOSS OF LIFE AND ACCIDENT TO PERSONS

ARISING FROM

Steam Boiler Explosions.

Full information concerning the plan of the Company's operations can be obtained at the

COMPANY'S OFFICE, HARTFORD, CONN.,

Or at any Agency.

J. M. ALLEN, President. W. B. FRANKLIN, Vice-Prest.
J. B. PIERCE, Secretary. FRANCIS B. ALLEN, 2d Vice-Prest.
E. J. MURPHY, M. E., Consulting Engineer.

Board of Directors.

J. M. ALLEN, President.
FRANK W. CHENEY, Treas. Cheney Brothers Silk Manufacturing Co.
CHARLES M. BEACH, of Beach & Co.
DANIEL PHILLIPS, of Adams Express Co.
RICHARD W. H. JARVIS, Prest. Colt's Fire Arms Manufacturing Co.
THOMAS O. ENDERS, President of the U. S. Bank.
LEVERETT BRAINARD, of The Case, Lockwood & Brainard Co.
GEN. WM. B. FRANKLIN, U. S. Commissioner to the Paris Exposition.
NELSON HOLLISTER, of State Bank, Hartford.
HON. HENRY C. ROBINSON, Attorney-at-Law, Hartford, Conn.
HON. FRANCIS B. COOLEY, of the National Exchange Bank, Hartford, Conn.
A. W. JILLSON, late Vice-Prest. Phœnix Fire Ins. Co., Hartford, Conn.
EDMUND A. STEDMAN, Treasurer of the Fidelity Co., of Hartford, Conn.
CLAPP SPOONER, Bridgeport, Conn.
GEORGE BURNHAM, Baldwin Locomotive Works, Philadelphia.
HON. NATHANIEL SHIPMAN, Judge United States Circuit Court.

A. S. Ferry, General Agent, Office at Hartford, Conn.

GENERAL AGENTS.	CHIEF INSPECTORS.	OFFICES.
THEO. H. BABCOCK,	R. K. McMURRAY,	NEW YORK CITY. Office, 285 Broadway.
CORBIN & GOODRICH,	WM. G. PIKE,	PHILADELPHIA. " 430 Walnut St.
LAWFORD & McKIM,		BALTIMORE, MD. " 22 So. Holliday St.
C. E. ROBERTS,	WM. U. FAIRBAIRN,	BOSTON, MASS. " 35 Pemberton Sq.
		PROVIDENCE, R. I. " 29 Weybosset St.
H. D. P. BIGELOW,	H. D. P. BIGELOW,	CHICAGO, ILL. " 112 Quincy St.
C. C. GARDINER,		ST. LOUIS, MO. " 404 Market St.
L. B. PERKINS,	F. S. ALLEN,	HARTFORD. " 218 Main Street.
W. G. LINEBURGH & SON,	J. H. RANDALL,	BRIDGEPORT. " 11 Franklin Block.
GEO. P. BURWELL,	C. A. BURWELL,	CLEVELAND. " 208 Superior St.
MANN & WILSON,	J. B. WARNER,	SAN FRANCISCO. " 306 Sansome St.
ZOLLARS & McGREW,	T. E. SHEARS,	DENVER, COL. " Granite Bl'g, Rm's 3, 4.
LEITH & MANLY,	B. F. JOHNSON,	BIRMINGHAM, ALA. " 2015 First Ave.
W. S. HASTIE & SON,		CHARLESTON, S. C. " 44 Broad St.

The Locomotive.

PUBLISHED BY THE HARTFORD STEAM BOILER INSPECTION AND INSURANCE COMPANY.

NEW SERIES—VOL. XI. HARTFORD, CONN., NOVEMBER, 1890. No. 11.

On the Strength of Triple-Riveted Butt-Strap Joints.

In the October issue of the LOCOMOTIVE we gave Mr. John H. Cooper's solution of a problem in riveted joints, and in this issue we take pleasure in reproducing a solution of a similar problem by Mr. Vau Clain, of the Baldwin Locomotive Works. The dimensions of the joint in question are as follows: The plates are of steel, $\frac{3}{8}$ of an inch thick, and with a tensile strength of 55,000 pounds to the square inch. The rivets are of iron, $\frac{3}{4}$ of an inch in diameter, with a shearing strength of 45,000 pounds to the

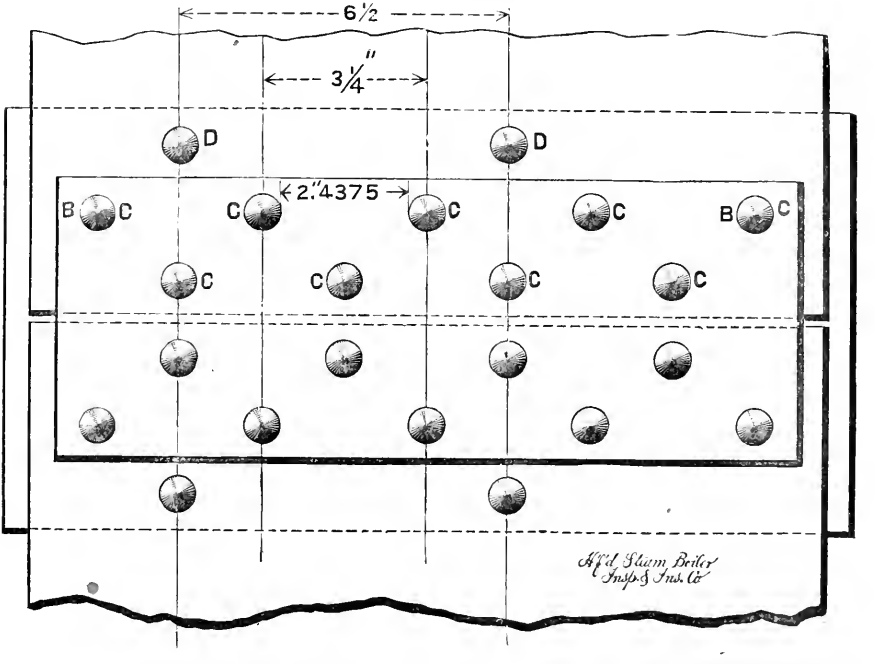

square inch. In the double riveted portion the pitch is $3\frac{1}{4}$ inches, and in the outside row it is $6\frac{1}{2}$ inches. The problem is, to decide what the strength of the joint is, in terms of the solid plate, and in accordance with the Philadelphia City Ordinance, which does not expressly provide for joints of this character. Mr. Vau Clain's solution of the problem was given in the September number of the LOCOMOTIVE; but, as it was there given, it contained several typographical errors, which have been corrected in what follows:

There are three ways in which a joint of this character may fail: (1) by shearing all the rivets, which involves rivets *D* in single shear, and rivets *C* in double shear; (2)

by a fracture of the plate across the line *BB*, and a simultaneous shear of the rivets *DD*; (3) by a fracture of the plate along the line *DD*.

Let us consider a portion of the joint $6\frac{1}{2}$ inches long, say the portion included between the two long vertical lines passing through the rivets *DD*. The strength of the solid plate in a unit of this length is

$$\text{Strength of solid plate} = 6\tfrac{1}{2} \times \tfrac{3}{8} \times 55{,}000 = 134{,}062 \text{ pounds.}$$

If the joint break in accordance with the first supposition, there are four whole rivets, *CCCC*, to be double-sheared, and one whole one, *D*, to be single-sheared. The diameter of the hole filled by the rivet being, say, $\frac{13}{16}$ of an inch, the sectional area of each rivet is .5185 sq. in. Hence

$$\text{Shearing strength of } CCCC = .5185 \times 4 \times 2 \times 45{,}000 = 186{,}660 \text{ lbs.}$$
$$\text{Shearing strength of } D = .5185 \times 1 \times 45{,}000 = 23{,}332 \text{ lbs.}$$
$$\text{Strength of joint, on supposition (1).} = 209{,}992 \text{ lbs.}$$

The diameter of the hole filled by the rivet, $\frac{13}{16}$, when expressed decimally, is .8125. If the plate breaks across *BB*, in accordance with the second supposition, the effective section in the part of the joint under consideration is reduced by twice this amount on account of the two holes punched or drilled for the rivets *CC* that lie on the line *BB*. Hence, the effective width of plate along this line is

$$6.5'' - (2 \times .8125'') = 6.5'' - 1.6250'' = 4.875''$$

Hence, the resistance of the $6\frac{1}{2}$-inch section to fracture in this manner is

$$\text{Tensional strength of plate along } BB = 4.875 \times \tfrac{3}{8} \times 55{,}000 = 100{,}547 \text{ lbs.}$$
$$\text{Shearing strength of one rivet in row } DD = .5185 \times 1 \times 45{,}000 = 23{,}332 \text{ lbs.}$$
$$\therefore \text{ Strength of joint, on supposition (2)} = 123{,}879 \text{ lbs.}$$

On the third supposition, we have merely to break the plate across

$$6.5'' - .8125'' = 5.6875''.$$

Hence, tensional strength of plate across $DD = 5.6875 \times \frac{3}{8} \times 55{,}000 = 117{,}305$ lbs.

In accordance with the Philadelphia rule, we are to take the least of the three strengths of the joint computed above, and divide it by the tensile strength of $6\frac{1}{2}$ inches of the solid plate, which strength we have already found to be 134,062 lbs. Obviously, the joint is weakest along the line *DD*, so that we have to call its strength 117,305 lbs. Hence, the percentage of strength of the joint is

$$117{,}305 \div 134{,}062 = 0.875$$

Hence, the joint, in its weakest part, has $87\frac{1}{2}$ per cent. of the strength of the solid plate.

It may be well to say that the number 2.4375″ in the cut represents the distance in the clear from edge to edge of the rivet holes, though for the sake of clearness, it is shown as though it extended only from the head of one rivet to the head of the next.

Boiler Explosions.

SEPTEMBER, 1890.

LOCOMOTIVE (144). Locomotive No. 25, the "Morris," on the Delaware, Lackawanna & Western railroad, exploded on Sept. 1st, at Waterloo Station, N. J. The locomotive was attached to the Easton express, bound for Hoboken. It reaches this city daily at 4.08 o'clock in the afternoon. By the explosion the locomotive was entirely demolished. The engineer and the fireman were in the cab at the time, but fortunately escaped injury. The bell of the engine was driven through the depot, the stack was thrown down the track, and pieces of the boiler flew in all directions. The front of the

boiler was blown several hundred yards down the track. The crash was heard all through the town and attracted large crowds. The passengers received only a slight jar from the backward motion of the train.

LOCOMOTIVE (145). Pennsylvania Railroad locomotive 1,324 was sent to the company's new round-house at the Point of Rocks, Jersey City, on Sept. 9th, just before it was to make a trip to Philadelphia. While fireman Conway Quinn was oiling up the big iron horse, he was startled by a loud noise. The dome of the boiler had blown off. It made its way through the roof, tearing out a hole eight feet in diameter. Steam filled the round-house, but its temperature was not high enough to scald. The damage caused is not great. No one was hurt.

LOCOMOTIVE (146). On Sept. 14th, the boiler of a switch-engine of the St. Louis, Kansas City & Colorado railroad exploded at East St. Louis. Engineer Burrett and fireman Doughenay were instantly killed. Fragments of the boiler were hurled in all directions, one section weighing fully a ton being deposited 300 yards away. A number of loaded cars were badly wrecked, and a large tree 200 yards away was split open by a piece of iron weighing 200 pounds. The noise caused by the explosion was heard fully a mile away. Several days previously, the crew of this engine deserted her because they considered her defective. She was then taken back to the shops and repaired.

LOCOMOTIVE (147). News of a serious accident on the Norfolk & Western railroad reached Lynchburg, Va., on Sept. 15th. An extra locomotive or "pusher" is used to push east-bound freight trains up the Concord grade beyond the Six-mile Bridge, several miles below the city. Yesterday afternoon, while pushing a heavy train up the grade near 194-mile siding, the "pusher" exploded its boiler with terrific force, scattering fragments about promiscuously. Fireman Peter McElroy was killed outright; engineer Dick Taylor badly bruised and hurt; and John Whorley, a colored brakeman, had his arm broken.

COTTON-GIN (148). Mr. William Boyce was killed on Sept. 17th, in Union County, N. C., by the explosion of a steam-boiler. It is supposed that he was attending a steam cotton-gin at the time of the disaster.

BELTING MANUFACTORY (149). At the works of the Willemsen Belting Company of St. Louis, Mo., one of a battery of two boilers exploded on Sept. 17th, the resulting damage to property being in the vicinity of $2,000. The engineer and fireman were badly hurt, and the fireman has since died.

THRESHING ENGINE (150). The boiler of a steam-thresher, belonging to Simon Schaullis, exploded on Sept. 19th, while at work on his farm, near Marshfield, O. Mr. Schaullis himself was, perhaps, fatally injured, and his twelve-year-old son, Willie, was instantly killed. The machine was completely demolished.

LOCOMOTIVE (151). The boiler of an engine attached to a freight train on the East Tennessee, Virginia & Georgia railroad, exploded on Sept. 21st, near Chattanooga, Tenn. The engineer and fireman were killed, and a brakeman was seriously injured. The boiler of the locomotive had been recently overhauled, and new tubes had been put in. She was regarded as safe by the officers of the road, though the jury, at the inquest, declared that, in their opinion, the boiler was unsafe, and that the officials of the road were aware of the fact.

THRESHING ENGINE (152). By the explosion of a boiler on the farm of Mr. Andrew Meger, near Henderson, Minn., on Sept. 22d, Albert Riebe, the engineer, was seriously, but not fatally, scalded. Later reports give some details about the boiler. John Lukring, an engineer, says that the gauge registered 150 pounds just before the accident.

Charles A. Bisson, boiler inspector for the second district, says that he inspected the boiler on Sept. 17th for Deterling & Riebe, and submitted it to a hydraulic pressure of 150 pounds, and issued a license allowing 100 pounds steam pressure and ordered a new steam gauge. The change was made and the safety-valve set at 95 pounds. The inspector closes his report as follows: "I consider the collapse of that flue to have been due to an excessive high pressure and to the presence of an undue quantity of mud in the boiler."

SLATE QUARRY (153). A thirty-four horse power boiler exploded on Sept. 23d, in Granville, N. Y., in the Rockway & Hughes slate quarry. The greater portion of the boiler and engine were sent a distance of 150 feet. The boiler-house was entirely demolished. Several men had just left the house, and fortunately no one was injured.

PUMPING STATION (154). One of the large boilers at the water-works station, Corry, Pa., exploded on Sept. 25th, completely ruining the station building.

SUPPLY SHOP (155). A boiler explosion occurred in the Oil Well Supply Company's rig and reel shop at Bradford, Pa., on Sept. 26th, that damaged several buildings, but, fortunately, no one was injured. The fragments flew in every direction, except where people were at work. The front part of the boiler went up through the roof and, crossing Davis Street, went through the house occupied by Rev. Mr. Wood, tearing out the side of the building, and exposing the rooms on the first and second floors. One of the inmates was sitting within a few feet of the wall when the iron crashed down past him. The rear portion of the boiler also went through the roof and took an opposite direction from the other portion, plowing through the top of a box car on the Erie switch, and then tearing its way through Emery's warehouse, across Hilton Street, and through the Corbett reel shop, landing on the O., B. & W. R. R.

FURNITURE FACTORY (156). On Sept. 26th, a boiler exploded in Haller & Co's furniture factory, Bay City, Md. The engineer was knocked against the wall of the building, but was not injured. Willie Green, a lad about 16 years old, was running one of the planing-machines on the east side of the boiler, and the force of the explosion threw him out of the building. When he was picked up, it was found that his head and shoulders and right side were terribly scalded.

TILE-MILL (157). A boiler exploded in the tile-mill at Deedsville, Ind., Sept. 29th, and one of the workmen, Charles Deed, was killed. Other employes, George Abbott and Elijah Shoemaker, were dangerously injured. Half of the boiler was found three-quarters of a mile away.

THRESHING ENGINE (158). On Sept. 30th, the boiler of a threshing engine exploded on the farm of Ramsden & Sweatt, one mile east of Buxton, N. D., instantly killing engineer Osmond Knutson, and Charles Stein, a Swede. Knut Ostreim was badly scalded and had a leg broken. The force of the explosion shook buildings a mile away, and the report was plainly heard over six miles. It is claimed the steam-gauge was out of order. There were probably 300 pounds of steam on, and the gauge showed 80.

Insurance Experimenters.

We find it stated that at a recent meeting of the American Boiler Manufacturers' Association, in this city [New York], it was resolved to organize a steam-boiler insurance company, to remain under control of the Association; the company is to have a capital of a quarter-million, all of which is reported to have been subscribed. The proposition to form an insurance company seems to have been adopted with great enthusiasm,

generated by a roseate report from the committee appointed to consider the subject, which committee found that "the magnitude of the profits requires only casual reference to the magnificent reports of existing companies to determine." Of course there is no objection to the boiler-makers setting themselves up in business as boiler-insurers also; yet there are some considerations which they ought to understand better than their enthusiastic action indicates that they now do. There will be practical difficulties about inspections and rates when the makers of boilers come to insure them; for instance, when Mr. A, who makes a strong, first-class, and almost non-explodable boiler, compares the rate on his own work with that proposed for the boilers of others who turn out very ordinary work, there will almost certainly be "foaming." However, pass these difficulties by, and look only at the matter of profits. Is there any business in which it is perfectly straightforward and certain work to make large profits? Possibly boiler-making is such a business — we are not familiar with it; but insurance is not, and changing the field does not avoid the difficulties. We fear the boiler-men's committee have arrived at the "magnitude of the profits" by a quite too "casual" reference to "the magnificent reports of existing companies." Perhaps they derived their impressions from that editorial article in the Boston *Herald*, which figured that one company took in over $600,000 of premiums in 1888, and paid out only about $40,000 in losses. The company is the HARTFORD STEAM BOILER, and here are its figures for 1888 and 1889:

	1888.	1889.
Premiums,	$614,367	$568,561
Interest and other receipts,	57,781	66,084
Total,	$672,148	$634,645
Paid for losses,	40,811	41,909
Profits (?),	$631,337	$592,736
Not exactly, for we must deduct:		
Commissions,	$144,236	$148,781
Inspection,	169,385	186,742
General Expenses,	123,991	135,269
	$437,612	$470,792

The dividend paid in each of these years (not included in above figures) was 10 per cent. on a capital of a half million. A little over $40,000 for losses seems very gilded, but it seems less so when we note that more than four times as much was spent to *prevent* losses; it was the costly (yet economical) prevention which made the loss outlay so light.

We suppose that if a boiler-maker were to read in the papers that the farmers in convention had decided that the profits of boiler-making are irresistible and therefore had started a company to make boilers, he might smile knowingly and think that a large order had been given for some expensive experience. We have no desire to fend off competition from the Hartford Company, but in this world of waste it is a pity to have needless wastes. It takes special training and fitness to make boilers; so it does to insure them, or to insure anything else, although very many people have the notion that insurance, like editing a newspaper and raising spring chickens for the city market, is no specialty, and can be taken up and carried to success forthwith by anybody. Many have expensively discovered this notion to be a mistake; yet many others have not yet tried the experiment. Seriously, although we do it playfully, we advise the boiler-makers to try the chicken business a few years before they touch insurance; it will be more interesting, perhaps equally instructive, and certainly less expensive.—*The Independent.*

The Locomotive.

HARTFORD, NOVEMBER 15, 1890.

J. M. ALLEN, *Editor.* A. D. RISTEEN, *Associate Editor.*

THE LOCOMOTIVE *can be obtained free by calling at any of the company's agencies.*
Subscription price 50 cents per year when mailed from this office.
Bound volumes one dollar each.

Papers that borrow cuts from us will do us a favor if they will plainly mark them in returning, so that we may give proper credit on our books.

A MEETING of the American Society of Mechanical Engineers was held at Richmond, Va., on November 11th, 12th, and 13th. An excursion to Old Point Comfort and other places of interest followed on the 14th. At the time of going to press we have received no further particulars concerning the meeting, but, judging from the papers read, it was no doubt instructive and enjoyable.

THE account of the proceedings of the Hon. Alcibiades Simonides, given on another page, is very suggestive. We know a certain number of the forgeries that were perpetrated by him, but what security have we that he may not have been still more successful in other ventures, producing and selling rare old manuscripts that have not yet been recognized as fraudulent? And what security have we that there have not been other equally cunning rascals at work in the past, whose productions were less likely to be shown up in their true light, because scholars were less critical?

DR. ROBERT KOCH, the world-renowned bacteriologist, has been experimenting for over a year on a cure for consumption. A great many so-called cures have already been proposed, but nothing has stood the test of introduction into actual practice. The interest in Dr. Koch's case arises from the fact that he has worked up his method in a logical and scientific manner, and bases it upon a vast amount of exceedingly difficult chemical and microscopical research. Dr. Koch refuses to give any information on the subject, and his only assistant, it is said, is bound by an oath to absolute secrecy. It is believed, however, that the method consists in inoculating the patient with a lymph of some sort, in which certain metallic salts are dissolved. The preliminary experiments on guinea-pigs have been successful, and eight patients in a Berlin hospital have voluntarily submitted to treatment. In a month more we shall probably know all about it, as the doctor has promised to give an illustrated lecture on the subject within that time.

WE have received a report issued by the Manchester Steam Users' Association, of Manchester, England, giving an account of the experiments made by them on the effect of showering cold feed-water on red-hot furnace crowns. The boiler upon which the experiments were made was of the ordinary Lancashire type, with plain furnace flues, with single riveted lap-joints, not strengthened by flanged seams or encircling rings. A review of the report will be found in *Engineering* (London) for Oct. 3, 1890. It gives us pleasure to say that the results of the experiments accord with the opinions held by this company for the past twelve or fifteen years, and published at intervals in the

LOCOMOTIVE and elsewhere. It was found, for instance, that the introduction of the cold feed did not lead to an explosion, even when the crown sheet was red-hot; but that, on the contrary, it was often followed by an actual *diminution* in steam pressure. We should not recommend the introduction of cold feed-water at such a time, however, because it is likely that the consequent sudden chilling of the plates might, under some circumstances, produce strains in the shell that would hasten the failure of the crown-sheet, or of some of the tubes, so that the attendant might be scalded.

IN the death of Mr. Newton Case, which occurred on the 14th of September, this company loses one of its early friends and directors. Mr. Case had been a member of its Board almost from its organization, and his advice and counsel were highly valued, particularly in the early days of its existence. He was identified with the leading industrial and financial institutions of the State, and was interested in other enterprises in other parts of the country. He will be much missed in the business, religious, and social circles of this city, having been a resident here for more than sixty years.

Hydraulic Tests.

The value of the hydraulic test as a means of detecting defects in steam-boilers or other vessels subject to internal pressure is a question often canvassed amongst engineers, and one with regard to which considerable difference of opinion prevails.

By some the satisfactory application of the hydraulic test to a boiler is regarded as an adequate proof of its safety equal in value to the most painstaking inspection. Others will affirm that such a test is of little or no value except as a demonstration of tightness, and that, unless accompanied with a careful and searching examination, it may be delusive; while some hold that to submit a boiler to a test of double the working pressure, as is sometimes done, is positively harmful, as the material of the structure is thereby seriously distressed, incipient flaws developed, and defects brought into existence which would otherwise have had no being.

As in most cases where divergence of opinion exists, the advocates of the various views can adduce instances which appear to support their aspect of the question; and, as often happens in technical and professional matters, the apparent difference or opinion between rival authorities disappears to a large extent when a comparison comes to be made.

That the hydraulic test is a very convenient method of testing the tightness of the work in a new boiler cannot be gainsaid, and hence its almost universal adoption, in conjunction with inspection to a greater or lesser degree, in the passing of new work. As a detector of leakages it has at least no rival, and its application enables faulty caulking to be made good before the boiler has left the works, and before a leak has time to enter on its insidious career of corrosion. The extent to which it enables the soundness and quality of the work to be ascertained is another matter, and depends on several conditions. It will be evident that if the test be applied with this object to a new boiler, the pressure should range to some point in excess of the working load if such a test is to be of any practical value. What the excess should be so as to remain within safe limits cannot be stated without regard being paid to the factor of safety adopted in the structure, and a discussion of the matter without reference to this point is one frequent source of confusion.

In boilers built under the inspection of the Board of Trade or Lloyd's Register, the rule is to carry the hydraulic test to double the working pressure. Under the survey of the Steam Users' Association the limit of hydraulic pressure is fixed at one and three-quarter times the working load. With some of the other boiler-inspecting institutions the rule is to apply only one and a half times, while one company determines the range of the test by adding a pressure of 60 lb. to the working load for pressures ranging from 60 lb. to about 100 lb.; that is to say, for a working pressure of 60 lb. the hydraulic test would be 120 lb., or double the working load, while for a 100 lb. boiler the test pressure would be 160 lb., or only one and six-tenths the working load. Were a uniform factor of safety adopted in boiler construction by the various supervising and inspecting associations, the foregoing conflict of rules would represent considerable divergence of opinion, whereas a reduction of the results to this standard shows them to be fairly consistent with each other. For instance, in the case of the Board of Trade and Lloyd's, the factor of safety is hardly ever less than 5, and is very frequently nearer 6 — the precise factor depending on mode of construction and quality of workmanship. Taking it, however, for the sake of comparison, at, say, $5\frac{1}{2}$, then a test of double the working pressure would be equivalent to a strain represented by .363 of the bursting stress. In the case of the Steam Users' Association, who require a factor of safety of 5 in boilers constructed under their inspection, a hydraulic test of $1\frac{3}{4}$ times the working pressure represents a proof strain of .350 of the ultimate stress. In the case of the other inspecting institutions a factor of safety of 4 is accepted, and with this factor a hydraulic test $1\frac{1}{2}$ times the working load represents a proof strain equivalent to .375 of the bursting stress. It will be seen, therefore, that, measured by the bursting pressure of the boiler, the above practice is fairly consistent, the hydraulic test or "proof strain" being (in the three cases we have taken) respectively 35, 36, and 37 per cent. of the ultimate stress, a difference of only 2 per cent. between the highest and lowest; while it will be noticed that a hydraulic test of $1\frac{1}{2}$ times the working pressure, with a factor of safety of 4, imposes a slightly greater strain upon the structure than a test of double the working pressure where a factor of safety of $5\frac{1}{2}$ is allowed. A comparison of the results shows not so much a difference of opinion as to the range of the hydraulic test — or, as we should prefer to call it, the "proof stress" — as a difference regarding the factor of safety that should be allowed for steam-boilers and similar structures. This is a point that we do not propose to discuss here at length, though we hope to return to it on some future occasion, contenting ourselves, in passing, with the remark that it is not one with regard to which it is possible to lay down a cast-iron rule.

In addition to the advantage which the hydraulic test affords as a means of proving the tightness of the riveted seams and work generally, it is also of frequent assistance in determining the sufficiency of the staying of flat surfaces, especially when of indeterminate shape, or when the stresses thrown upon them by the peculiar construction of the boiler are of uncertain magnitude. For the hydraulic test, however, to be of any real value in the special cases to which we refer, it is essential that it should be conducted by an expert, and the application of the pressure accompanied by careful gaugings, so as to enable the amount of bulging and permanent set to be ascertained. Without such readings the application of the test in such cases is worthless, and may be delusive. Indeed, the careful gauging of the boiler as a record of its behavior should be a condition of every test, and is a duty requiring for its adequate performance a skilled inspector. This is a point to which we would commend the attention of steam-users, who often imagine that, by standing alongside the boiler and watching the gradual rise of the pressure gauge, every information is afforded which the test can sup-

ply. How fallacious such a notion is those who are familiar with skilled testing and gauging will readily understand, though the ignorance of steam-users on a technical point of this kind is frequently imposed upon; and our advice to such is, delegate the duty of inspecting a new boiler or witnessing the hydraulic test to one of the regular inspecting companies, who have men in their employ specially trained for the performance of such work. The advantage accruing from such a course is well worth the fee charged for the service, and secures a searching inspection of the workmanship, which frequently brings to light defects and oversights that a mere pumping-up of the boiler would never reveal. Such a proceeding alone, in fact, can only prove that the boiler is water-tight, and a boiler may be tight under test although the workmanship is of execrable character. Besides, it is well to bear in mind that the tightness of a boiler under test is no guarantee of its tightness after it has got to work. In a word, as far as new boilers are concerned, the application of hydraulic pressure unaccompanied by careful inspection and gaugings may be almost worthless, while with these additions it may be extremely valuable, especially in the case of boilers of peculiar shape, and is a precaution that should not be neglected.

As the application of the test to old boilers is occasionally resorted to as a substitute for inspection, it may be well to point out that although a convenient adjunct to inspection where inaccessible spaces are concerned, a too exclusive reliance upon it is to be deprecated, and several instances have occurred within our experience where the successful resistance of the hydraulic test has led to conclusions being drawn with regard to the safety of the boiler which subsequent experience has proved to be erroneous. Apart from the fact that the repeated imposition of a test load of 35 or 36 per cent. of the ultimate strength of a structure is calculated to produce general deterioration, it is to be remembered that the application of a quiet, steady water pressure is no measure of the intense local racking stresses which are frequently brought into play by the action of the fire when the boiler is in work, and which occasionally develop defects of serious magnitude with startling suddenness.

Take, for example, the case of long egg-ended externally-fired boilers, which — as those of our readers who have experience of them will be aware — occasionally develop fractures at the ring seams with little or no warning beyond a few incipient cracks. It is very questionable to us whether the periodical testing of such boilers by hydraulic pressure to, say, one-third the calculated bursting stress would afford more reliable information with regard to the condition of the seams than could be obtained by careful inspection, meagre as such information frequently is; while it is quite conceivable that the application of such a test may develop and extend an existing fracture to such an extent as to render it a source of danger, without affording any evidence of having done so.

Similar remarks will apply to the case of lap-riveted locomotive barrels, where a groove not infrequently forms at the edge of the inner overlap of the longitudinal seams, and, unless detected and arrested in time, slowly eats its way through the shell, until explosion occurs. These seams, from their position on the side and bottom of the shell, are often absolutely precluded from internal inspection unless the smoke tubes are drawn, and this involves an expense which owners are chary of incurring, so that the hydraulic test is not infrequently applied as a substitute for inspection. The fact that more than one such case of failure has been recorded shortly after the boiler has successfully resisted the hydraulic test would show that it cannot be regarded as an equivalent for inspection, and leaves an element of doubt that can only be positively removed by the drawing of the tubes.

Again, in the case of flue tubes of Lancashire and Cornish boilers, we have known of cases where the collapse of the flue has shortly followed the application of a hydraulic test considerably in excess of the working pressure, a result which will hardly be surprising to those familiar with the failure of such structures. When seriously distressed with a high-working pressure, they appear to undergo a gradual process of deformation, which eventually resolves itself into collapse, and it is easy to see that under certain conditions the application of the hydraulic test may only serve to hasten the inevitable end.

Other illustrations could be quoted, but we have already exceeded the limits of our space, and sufficient has been said to show that although the hydraulic test is often a valuable adjunct to boiler inspection, it can by no means be accepted as an equivalent, and that a slavish reliance upon its application without careful checks may be fraught with disaster.—*Practical Engineer (London).*

A Wonderful Literary Forger.

In an Albanian village there died recently one of the most original and artistic swindlers of the present century. Alcibiades Simonides was a master of drawing, a fine lithographer, and an excellent chemist. He was an omnivorous reader of history, which he retained to the smallest details in the iron grip of his memory. He had eloquence, ingenuity, and perseverance. All of these talents he devoted to a single purpose. He made a profession of swindling the most learned of his contemporaries.

Simonides made his début at the age of thirty-five at Athens. He then laid before the King of Greece a mass of apparently priceless manuscripts. They were seemingly of great antiquity, and included works which had long been lost to civilization. Simonides explained that he and his uncle had discovered the manuscripts in the Cloister Chilandarim on Mount Athos. He told just how and when the manuscripts were found, and fortified every sentence with copious references to literary history and classical authorities. The King bought $10,000 worth of the treasures, and Simonides disappeared.

In a year he was back again with another batch of marvelously valuable old manuscripts. Among them was an ancient Homer, written on lotos leaves, and accompanied by a complete commentary of Eustatius. The King wished to buy the whole lot, but could not see his way clear to raising money for more than half of it. The rest of the manuscripts he recommended for purchase to the university of Athens. The rector of the university was not without misgivings as to the smooth stories of Simonides, and at his suggestion, a commission of twelve scholars was appointed to test the genuineness of the documents. After a long investigation, eleven members of the commission reported that the manuscripts were authentic. The twelfth, Professor Mavraki, called for a new investigation, which was eventually made. The result was the discovery that Simonides's Homer was a verbatim copy, even to the typographical errors, of Wolff's edition. The commission summoned Simonides to appear before it and explain, but he had got wind of the state of affairs, and had skipped away with the proceeds of his sales to the King.

For a few years he was completely lost to view. His performance in Athens was almost forgotten. In the middle of the sixties he turned up, unrecognized and unsuspected, in Constantinople, with an old Greek work concerning hieroglyphics and an Assyrian manuscript with an interlinear Phœnician translation. For the delectation of Armenian scholars he had also brought a Greek history of Armenia. He found patrons enough, and had soon transformed his manuscripts into cash to the amount of about

$40,000. When the introduction and the first chapter of the Armenian history were published, it was remarked that the names of the Armenian generals were not Armenian, and Simonides was again missing when called upon for explanation.

The slight historical error as to the Armenian generals and their names wound up the first period of Simonides's career, and led him to vary somewhat his manner of working in his future schemes. The first evidence of this change was his announcement to western European scholars, some time later, that he possessed a roll dating from the days when the French and Venetians ruled Constantinople. In this roll, he said, a monk had recorded that there were buried manuscripts of great age and value, at various spots on the Bosphorus. The location of these spots was described accurately in the roll.

In a certain cloister, Simonides said, might be found the acts of the first Apostolic Concilium of Antioch. Eventually, Simonides sought the aid of the patriarch in unearthing these treasures. The patriarch, however, answered that "these acts were superfluous. Either they confirmed or contradicted the canons of the Greek Church. In the first case they were useless; in the second, they were worse than useless, and the finding of them would be a criminal deed." Simonides then waited on the Minister of Public Works, Ismail Pasha. The Pasha was in his harem when Simonides called, and so the forger busied himself with a little exploration of the garden while waiting. He buried a small box under a big fig tree there, and when the Pasha appeared, remarked that the garden seemed to be the location of buried manuscripts mentioned in this and that classical work. After screwing the Pasha's interest up to the necessary ardor, he suggested that digging for the manuscripts should begin at once. He directed that the first excavation be made under the fig tree. In a few minutes the Pasha's workmen struck a curious old box, in which lay a bit of discolored parchment, bearing a poem ostensibly written by Aristotle. The Pasha was delighted, and filled Simonides's hands with Turkish money. A few days later, Ismail was brought down from the clouds by the remark of his gardener that the fig tree in question had been transplanted only twenty years before, and that all the ground on and about the spot where the box was found had been dug up thoroughly at that time. The Pasha's chagrin was so great that he made no effort to bring Simonides to justice.

The cunning old Greek derived encouragement from the impunity with which he had executed his last manœuvre. He looked around for another Turkish victim, and decided that he had found him in Ibrahim Pasha. Ibrahim had just broken ground for the erection of a building on the site of the ancient Byzantine hippodrome. Simonides told him that a few yards below the surface, at a certain spot, there must be an Arabian manuscript. The Pasha's workmen dug there, but found nothing. "Let me dig," exclaimed Simonides. He dug, and in five minutes handed the Pasha a curious bronze box. Within it was an Arabian poem on parchment. The Pasha wished immediately to give Simonides a splendid reward. He was stopped, however, by a laborer, who said he had seen the Greek slip the little chest from his sleeve into the hole. There was a dispute of considerable violence, and eventually the decision of the points of authenticity and veracity was postponed to the next day. That was the last Ibrahim Pasha saw of Simonides.

Two months later Simonides appeared at the British Museum with a memorandum of the General Belisarius to the Emperor Justinian. He sold it for $3,200 to the Duke of Sutherland, and also disposed of a beautiful letter from Alcibiades to Pericles to the same purchaser for $1,000. When the fraud was discovered, Simonides was off away on the Continent again. No trace of him could be found, and the scholars of Europe hoped

and thought they were at last relieved of this disturber of the traditions of antiquity. One day, however, the news came from the Athos cloisters that the indefatigable forger was loose again under the assumed name of Baricourt. The monks throughout that part of the world were warned against him, and he was eventually caught in the Iberian cloister in the act of adding to an old manuscript a little supplementary matter of his own composition. He was rushed out, the warning against him was published far and near, and he was made so notorious that his profession ceased to be profitable.

One of the last meetings of the learned doctor with a man of the world occurred in Corfu a few years ago. A correspondent of the Vienna *Tageblatt* returned to his room in the Hotel St. George one evening to find on his table a card bearing the words: "The deceased Dr. Alcibiades Simonides. Meet me on the Esplanade at midnight to learn of a matter of the greatest importance." At the midnight meeting Simonides explained that he called himself deceased, not only because he was dead to the world, but because in a recent illness he had been pronounced physically dead, had been put into the coffin and lowered into his grave, and had been aroused by the gravel falling on the lid just in time to secure his release by a tremendous knocking and groaning. The purpose of Simonides's appointment, however, was to show a document apparently written by Leopold the Glorious, in which the Babenberger Prince related in the form of a diary his experiences during the Crusades, including some highly interesting particulars of his meeting with Richard the Lion Hearted. Simonides described how he had picked up this work in Jerusalem, and had brought it with the idea of selling it to the Vienna Academy of Sciences.

At the time of his death Simonides was seventy-two. He was of medium height, thin as a bone, and moved mechanically. He had small eyes, a jaundiced skin, and lips like paper. A big black beard hung to his waist. While conversing, he held his arms crossed on his breast. He never smiled, had no friends, and died alone without having a person to mourn for him. He had existed for nearly forty years by imposing on men of great learning in the field of their special knowledge. He was probably one of the most erudite rascals that ever lived. — *New York Sun.*

The Modern Conception of Light.

So much has been written lately concerning the relation between light and electricity, and the possibility of producing light without the cumbrous and wasteful mechanism now necessary, that it may be of interest to review the history of the subject, and outline the conception that physicists now have of light.

For a long time it was believed that we see because of some innate property of the eye. As Tait says, "It is very remarkable to find how slowly the human race has reached some even of the simplest facts of optics. We can easily understand how constant experience must have forced on men the conviction that light usually moves in straight lines; *i. e.*, that we see an object in the direction in which it really lies. But how they could have believed for ages that objects are rendered visible by something projected from the eye itself, so that the organ of sight was supposed by the most enlightened of them to be analogous to the tentacula of insects, and sight itself a mere species of touch, is most puzzling. They seem not, till about 350 B. C., to have even raised the question, If this is how we see, why cannot we see in the dark?"

Aristotle seems to have been the first philosopher to call attention to this absurdity, but it was a long time before any one proposed to account for the phenomenon in a rational way, bringing facts to the support of theory. Sir Isaac Newton gave great

attention to this subject, and with the names of Newton, Biot, and Laplace we associate the "corpuscular theory." This theory assumes that luminous bodies are continually sending out a great storm of most minute particles of some sort or another, which enter our eyes and strike against the retina, stimulating it in such a manner as to give rise to the sensation that we call sight. There are numerous objections to this theory, although it can be made to explain most of the phenomena of vision. One of the objections is, that a projectile weighing half a grain and moving with the velocity of light would have a penetrating power equal to that of a shell weighing a ton and a quarter, and fired from a 100-ton gun with a muzzle velocity of 1,800 feet per second! Now, of course, we cannot suppose the light-corpuscles to weigh anything like half a grain, but it seems possible they might be of sufficient size to injure the delicate retinal curtain of the eye, particularly if the bombardment were kept up for any length of time.

The only other theory of light that has serious claims to attention is the "undulatory theory," which assumes it to be a wave-like disturbance of some sort. For instance, we know that sound consists in wave-like vibrations of the air; and we may assume light to be of the same general character, though, of course, it is not necessary for us to suppose the natures of the waves or vibrations to be at all alike in the two cases.

Tait well remarks that "the difference between these two theories of light may be illustrated by contrasting wind moving at the rate of 1,100 feet per second (80 corresponds to a violent hurriance) and sound, gentle or violent, moving at precisely the same rate, yet how different in its effects!"

According to Newton's theory, colors must arise from differences of some sort among the corpuscles; what the precise nature of these differences may be, it is unnecessary for us to examine. On the other hand, according to the undulatory or wave-theory, the color of a given light depends upon the shortness of the waves composing it, very short waves producing the sensation of blue, and longer ones producing the sensation of red, waves of intermediate length giving rise to the sensations of orange, yellow, green, etc. The analogy with sound is very helpful at this point, for we know by experiment that the quality of sound that we call "pitch" depends on the wave-length of the sound, short wave-lengths giving rise to the sensation of a high pitch. The pitch of a sound is thus closely analogous to the color of a light.

The velocity of light has been determined by a variety of methods, some of which are astronomical, and some physical, the latest measures giving about 186,000 miles per second. It may be shown that, if the corpuscular theory is correct, light must move faster in water than in air; while, if the undulatory or wave-theory is correct, it must move faster in air than in water. (For proof of this see the *Encyclopædia Britannica*, article, *Light*.) Here, therefore, is an excellent chance to put the two theories to the test; and, in 1865, Foucault, a French experimenter, showed by direct measurement that light moves slower in water than in air, thus finally disposing of the corpuscular theory, and putting the wave-theory on a firm basis.

But if we admit the truth of the wave-theory, we come at once to a difficulty. To illustrate, let us consider the course of a ray of sunlight. "The sun expends energy, and sends it off from him. This energy travels through the dark planetary spaces until it falls on the eye, and then it is felt as light. . . . In what form did this energy, which we know as light and radiant heat, exist in the dark space between the sun and earth?" The wave-theory answers that it consisted in a wave-like motion of something. But what can that something be? Is not space empty and vacuous? The only reply seems to be that interplanetary space, which appears to be empty, is, in reality, filled by a transparent, non-resistant substance, which allows such bodies as planets and comets to move through it freely, but which is set in tremulous motion by molecular vibrations. This substance, the existence of which seems to be proven beyond a doubt, is called the "ether." (Of course, the ether of space is not related in the least to the anæsthetic bearing the same name.)

Maxwell and others have investigated the properties of the ether mathematically, and have reached some very curious results. In the first place, it must be incompressible; for, if this were not the case, certain phenomena that do not take place would be observed. In this respect the ether resembles a liquid. It is, however, capable of transmitting certain kinds of vibrations that are not possible in either liquids or gases; and for this reason we must regard it as a jelly-like solid. If we consider it as a solid, however, we have to face the facts (1) that its rigidity is only one thousand-millionth of the rigidity of steel, and (2) that its density is only one two-million-million-millionth of that of water. On the whole, it is a very strange substance; and the best conception we can form of it, is that it is like a very attenuated, impalpable, and all-pervading jelly, through which light and heat waves are constantly throbbing.

Let us now pass to the consideration of certain other phenomena, which at first sight appear to have no connection with those we have been discussing.

It is well-known that if a piece of sealing-wax be rubbed with flannel, it acquires certain peculiar properties. It is able to attract to itself light substances, such as lint, pith, and bits of feather. In common language, we say that it has become *electrified*. A great many other substances, such as glass, sulphur, rubber, amber, and dry paper have this same property of becoming electrified when rubbed.

Now, it is not our intention to enumerate the experiments that may be performed with such substances, as these may be found in any of the multitude of books on the subject. We shall confine our attention to one fact, which is, that when an electrified body is brought near an insulated piece of metal, the metal becomes electrified also, even though no contact takes place between the two bodies. Here is a most astonishing fact. The electrical state of one body is affected by that of another body without the slightest apparent connection between the two, for the same effect is observed in a vacuum as in air. Without tracing out the steps of the reasoning, we may say that the same reasons that compelled us to admit the existence of the ether, when we were considering light, also lead us to believe that there must be a medium of some kind to transmit an electrical disturbance from one body to another across what is apparently a vacuum. The nature of the disturbance in this medium, when a body is electrified, is now fairly well understood; and we may say, in a general way, that the medium is in a state of tension along lines radiating outward from the body, and in a state of compression in all directions perpendicular to these lines. In fact, Sir William Thomson has calculated that, in order for an electric spark to pass from one body to another, the tension in the medium, along the line joining the two, must be 9,600 grains per square foot.

Maxwell, who made a most elaborate investigation of this whole subject, showed that, when a body is electrified, there must be an actual displacement of the particles of the assumed medium that transmits the electrical influence; and, moreover, he showed that this displacement must be in a direction perpendicular to the line along which the electrical influence acts. (In light the displacements are also perpendicular to the ray, while in the case of sounds the displacements of the particles of air are in the *same direction* as the sound wave travels.)

It will be seen that light and electrical induction have certain points of analogy, although they seem so utterly different at first thought. For example, each requires, for its explanation, the existence of a medium that is very unlike any other substance that we know about. Moreover, Maxwell's work indicates that the medium that transmits light is the identical one that transmits electrical disturbances. It also appears that, both in light and in electrical disturbances, the displacements in the ether are perpendicular to the direction of propagation.

These facts and some others of a like nature led Maxwell to believe that there is a relation between light and electricity of a far more intimate nature than had ever been supposed. In fact, he felt that it was possible that light might be merely an electrical disturbance of an oscillatory nature, the only difference between the two being that in light the electrical strains in the ether are of a variable nature, following one another at the exceedingly rapid rate of from 400,000,000,000,000 to 700,000,000,000,000 times per second. Assuming this to be so, he predicted certain relations between light and electricity, and proceeded to put his predictions to the test. The only relation that we have space to consider, is the velocity with which light and electrical disturbances are propagated through air and other media. If Maxwell's surmise is correct, the two must move with the same velocity. The following table will give an idea of the agreement that was found to exist between the two:

Velocity of Light.		Velocity of Electrical Induction.	
Authority.	Miles per second.	Authority.	Miles per second.
Fizeau,	195,100	Weber,	193,000
Astronomical observ'ns,	186,500	Rowland & Helmholtz,	187,900
Foucault,	185,300	Maxwell,	178,900
Cornu,	187,100	Thomson,	175,200
		M'Kichan,	183,100
		Ayrton & Perry,	185,300

The agreement here is certainly all that could be expected, considering the difficulty of the measurements.

It is impossible to give any adequate idea, in a short article like this, of the brilliant results that Maxwell worked out mathematically, in relation to this subject. It must be sufficient to say that he left little to be desired, except an actual experimental production of light by the direct radiation of very rapid electrical disturbances. For instance, suppose a sphere of metal to be charged with positive electricity. Then suppose this charge to be removed, and an equal negative one to be applied. Then let the negative one be removed and an equal positive one applied, as at first, and so on. If this reversal of electrification could be produced with sufficient frequency, Maxwell's theory says that the metal sphere would shine brilliantly, not because the electrical impulses would be *transformed into* light, but because they would *be* light. We must, in fact, think of our eyes as delicate electroscopes, highly sensitive to such electrical disturbances when they succeed each other with a frequency of from four hundred to seven hundred millions of millions per second, the sensation produced in this case being what we call "light."

Now, if we could only electrify a body alternately positively and negatively, with the rapidity indicated above, we could directly demonstrate Maxwell's theory. We could very easily electrify a substance a few thousand times a second, but until recently no one has succeeded in materially exceeding this rapidity. Some forty years ago it occurred to Henry, Thomson, and Helmholtz that the discharge of a Leyden jar or other electrical condenser "might consist of a backward and forward motion of the electricity between the coatings, or of a series of electric currents alternately in opposite directions." Thomson made a very interesting mathematical investigation of the subject in 1855, in the course of which he discovered the conditions under which this phenomenon takes place, and showed how to find the rapidity of the back-and-forth currents under any given circumstances. Quite recently the now famous German experimenter, Heinrich Hertz, made use of this investigation of Thomson's to effect the electrical charging and discharging of two spheres of tin-foil at the rate of about a million reversals a second. This, of course, is so slow that the electrical waves sent out by his metal spheres could not affect the eye; but it occurred to him that, even though they were not visible, they ought to possess all the other properties that light exhibits. By a masterly and classical series of experiments he succeeded in proving that such is the fact. He found, for instance, that the waves of electrical disturbance travel with the same velocity as light (this had been proven before, though in an indirect manner), and that some substances, such as glass, are transparent to them, while others, such as the metals, are opaque. They are reflected from polished metal surfaces in the same manner as light, and may be brought to a focus, or sent in a parallel beam by parabolic mirrors. He found that an iron post in his laboratory cast a very appreciable electrical shadow. Refraction phenomena were also observed; and, by passing the rays through a prism of pitch, he was even able to calculate that the refractive index of this substance for the particular waves he used is 1.68. He reproduced a variety of diffraction phenomena, such as are described in treatises on light; and, most remarkable of all, he found that the rays of electrical disturbance can be polarized.

Hertz's experiments have proven Maxwell's theory beyond a reasonable doubt. Henceforward, if we wish to be accurate, we must regard every lamp and tallow dip simply as a center of electrical disturbance, which sets the surrounding ether in tremulous motion, the vibrations succeeding one another some 500,000,000,000,000 times a second.

Incorporated 1866.

HARTFORD STEAM BOILER INSPECTION AND INSURANCE CO. HARTFORD, CONN.

Charter Perpetual.

Issues Policies of Insurance after a Careful Inspection of the Boilers,

COVERING ALL LOSS OR DAMAGE TO

BOILERS, BUILDINGS, AND MACHINERY.

ALSO COVERING

LOSS OF LIFE AND ACCIDENT TO PERSONS

ARISING FROM

Steam Boiler Explosions.

Full information concerning the plan of the Company's operations can be obtained at the

COMPANY'S OFFICE, HARTFORD, CONN.,

Or at any Agency.

J. M. ALLEN, President. W. B. FRANKLIN, Vice-Prest.
J. B. PIERCE, Secretary. FRANCIS B. ALLEN, 2d Vice-Prest.
E. J. MURPHY, M. E., Consulting Engineer.

Board of Directors.

J. M. ALLEN, President.
FRANK W. CHENEY, Treas. Cheney Brothers Silk Manufacturing Co.
CHARLES M. BEACH, of Beach & Co.
DANIEL PHILLIPS, of Adams Express Co.
RICHARD W. H. JARVIS, Prest. Colt's Fire Arms Manufacturing Co.
THOMAS O. ENDERS, President of the U. S. Bank.
LEVERETT BRAINARD, of The Case, Lockwood & Brainard Co.
GEN. WM. B. FRANKLIN, U. S. Commissioner to the Paris Exposition.
NELSON HOLLISTER, of State Bank, Hartford.
HON. HENRY C. ROBINSON, Attorney-at-Law, Hartford, Conn.
HON. FRANCIS B. COOLEY, of the National Exchange Bank, Hartford, Conn.
A. W. JILLSON, late Vice-Prest. Phœnix Fire Ins. Co., Hartford, Conn.
EDMUND A. STEDMAN, Treasurer of the Fidelity Co., of Hartford, Conn.
CLAPP SPOONER, Bridgeport, Conn.
GEORGE BURNHAM, Baldwin Locomotive Works, Philadelphia.
HON. NATHANIEL SHIPMAN, Judge United States Circuit Court.

A. S. Ferry, General Agent, Office at Hartford, Conn.

GENERAL AGENTS.	CHIEF INSPECTORS.	OFFICES.	
THEO. H. BABCOCK,	R. K. McMURRAY,	NEW YORK CITY.	Office, 285 Broadway.
CORBIN & GOODRICH,	WM. G. PIKE,	PHILADELPHIA, PA.	" 430 Walnut St.
LAWFORD & McKIM,		BALTIMORE, MD.	" 22 So. Holliday St.
C. E. ROBERTS,		BOSTON, MASS.	" 35 Pemberton Sq.
		PROVIDENCE, R. I.	" 29 Weybosset St.
H. D. P. BIGELOW,	H. D. P. BIGELOW,	CHICAGO, ILL.	" 112 Quincy St.
C. C. GARDINER,		ST. LOUIS, MO.	" 404 Market St.
L. B. PERKINS,	F. S. ALLEN,	HARTFORD, CONN.	" 218 Main Street.
W. G. LINEBURGH & SON,	J. H. RANDALL,	BRIDGEPORT, CONN.	" 11 Franklin Block.
GEO. P. BURWELL,	C. A. BURWELL,	CLEVELAND, OHIO.	" 208 Superior St.
MANN & WILSON,	J. B. WARNER,	SAN FRANCISCO, CAL.	" 306 Sansome St.
ZOLLARS & McGREW,	T. E. SHEARS,	DENVER, COL.	" Granite Bl'g, R'ms 3, 4.
LEITH & MANLY,	B. F. JOHNSON,	BIRMINGHAM, ALA.	" 2015 First Ave.
W. S. HASTIE & SON,		CHARLESTON, S. C.	" 44 Broad St.

The Locomotive.

PUBLISHED BY THE HARTFORD STEAM BOILER INSPECTION AND INSURANCE COMPANY.

NEW SERIES—VOL. XI. HARTFORD, CONN., DECEMBER, 1890. No. 12.

Boiler Front with Breeching.

In the October issue of the LOCOMOTIVE we published perspective and sectional views of flush, overhanging, and cutaway boiler fronts, and also a perspective view of a front with breeching. The breeching there shown has a downward extension on either side of the front manhole, in order to take in two tubes on either side of the manhole, below the lowest full row of tubes. Such breechings are often used, especially in the

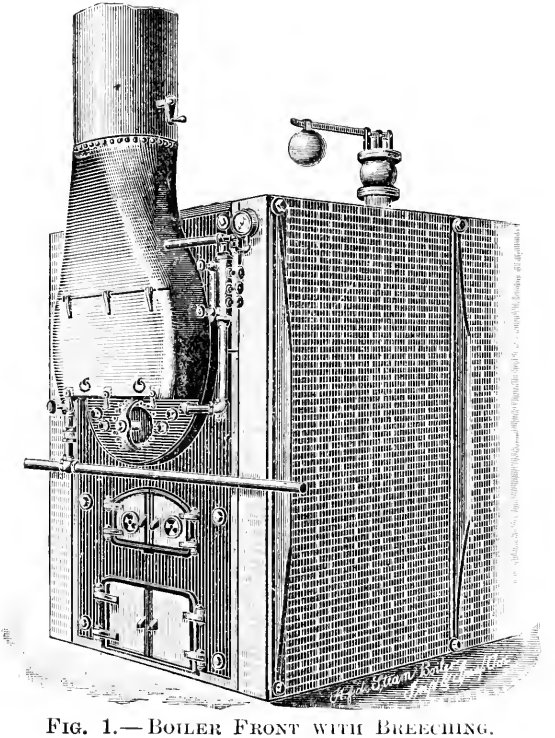

FIG. 1.—BOILER FRONT WITH BREECHING.

West; but, in our opinion, the four lowest tubes referred to above are of very little use in making steam, and not worth the expense of putting them in.

Fig. 1 in the present article shows a style of breeching that we prefer to the one illustrated in our October issue. It represents a sixty-inch boiler with four full rows of four-inch tubes, each row containing ten tubes. The breeching comes down in front far enough to include the lowest row, while not interfering with the manhole. The

arrangement of tubes and breeching will be understood by referring to the sectional view, Fig. 2. Part of the braces in this cut have been omitted for the sake of clearness.

Of course it is not necessary to put a manhole in the front head, when a breeching is used, though it is customary to do so on account of the increased facility it affords

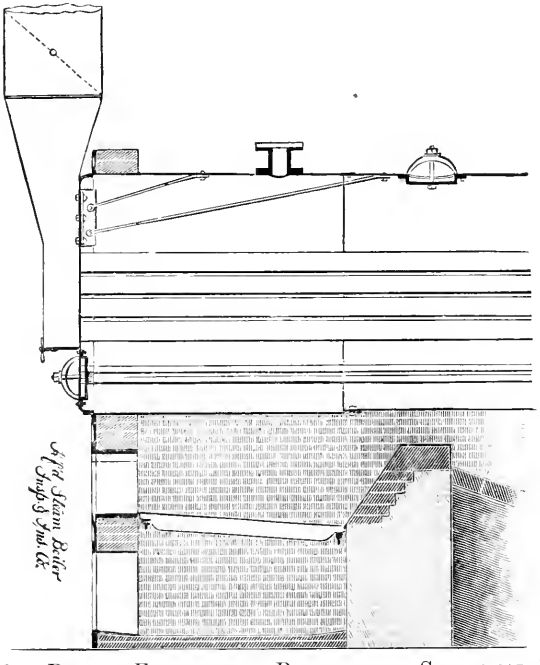

FIG. 2.—BOILER FRONT WITH BREECHING. SECTIONAL VIEW.

for inspection, and for repairs also, should these be necessary. To brace the portion of the head below the tubes, we recommend that four braces be run through the boiler from end to end, two on each side of the manhole. We recommend that these be secured at the front head by suitable nuts and washers, and at the back head (which is not stiffened by a manhole frame as the front head is), by double crowfeet and pins.

Inspectors' Reports.

JULY, 1890.

During this month our inspectors made 5,146 inspection trips, visited 10,724 boilers, inspected 5,206 both internally and externally, and subjected 583 to hydrostatic pressure. The whole number of defects reported reached 10,191, of which 793 were considered dangerous; 33 boilers were regarded unsafe for further use. Our usual summary is given below:

Nature of Defects.	Whole Number.	Dangerous
Cases of deposit of sediment,	631	37
Cases of incrustation and scale,	1,194	26
Cases of internal grooving,	51	7
Cases of internal corrosion,	413	36
Cases of external corrosion,	732	33

Nature of Defects.	Whole Number.	Dangerous.
Broken and loose braces and stays,	185	71
Settings defective,	255	10
Furnaces out of shape,	448	14
Fractured plates,	216	69
Burned plates,	156	15
Blistered plates,	364	8
Cases of defective riveting,	2,267	74
Defective heads,	68	11
Serious leakage around tube ends,	1,640	196
Serious leakage at seams,	447	44
Defective water-gauges,	325	27
Defective blow-offs,	67	15
Cases of deficiency of water,	13	10
Safety-valves overloaded,	33	8
Safety-valves defective in construction,	66	20
Pressure-gauges defective,	369	36
Boilers without pressure-gauges,	11	11
Miscellaneous defects,	240	15
Total,	10,191	793

AUGUST, 1890.

During this month our inspectors made 4,932 inspection trips, visited 8,555 boilers, inspected 4,165 both internally and externally, and subjected 417 to hydrostatic pressure. The whole number of defects reported reached 9,462, of which 731 were considered dangerous; 28 boilers were regarded unsafe for further use. Our usual summary is given below:

Nature of Defects.	Whole Number.	Dangerous.
Cases of deposit of sediment,	684	29
Cases of incrustation and scale,	1,085	49
Cases of internal grooving,	73	8
Cases of internal corrosion,	326	25
Cases of external corrosion,	631	40
Broken and loose braces and stays,	121	50
Settings defective,	181	22
Furnaces out of shape,	361	15
Fractured plates,	102	27
Burned plates,	167	15
Blistered plates,	235	12
Cases of defective riveting,	2,315	45
Defective heads,	79	32
Serious leakage around tube ends,	1,775	142
Serious leakage at seams,	374	52
Defective water-gauges,	285	54
Defective blow-offs,	71	18
Cases of deficiency of water,	22	7
Safety-valves overloaded,	46	14
Safety-valves defective in construction,	127	28
Pressure gauges defective,	308	34
Boilers without pressure gauges,	13	13
Miscellaneous defects,	81	0
Total,	9,462	731

Boiler Explosions.

OCTOBER, 1890.

MILL (159). An explosion in the boiler rooms of the Parkersburg Mill Company, Parkersburg, W. Va., on Oct. 2d, entirely wrecked the big plant. William Warlen and Poe Blanchard, the engineer and fireman, were frightfully scalded and will die. The damage, it is said, amounts to several thousand dollars.

SAW-MILL (160). On Oct. 2d, at Chewalla, near Purdy, Tenn., five men were instantly killed by the explosion of a saw-mill boiler belonging to a Mr. Gurley. Gurley, William Johnson, Walter Pitman, and his brother, and a son of Gurley, were instantly killed, and a negro laborer was fatally injured.

PLEASURE STEAMER (161). The boilers of the *Golden Eagle*, a small pleasure steamer, exploded on Oct. 2d, near Peoria, Ill., while she was making a trip around the lake front of the city with fifteen excursionists on board. The steamer was sunk, and, although all were saved, many had narrow escapes, and a few were slightly injured. When the explosion took place, the passengers became panic stricken and made a frantic rush for the least injured portion of the boat. This caused the little craft to careen, and she was immediately swamped and sank to the bottom of the lake. The passengers were seen struggling in the water from the shore, which, fortunately, was but a short distance off, and rescuers were soon on the spot and succeeded in rescuing all the excursionists and the crew, but not until some of them had become thoroughly exhausted and were on the point of drowning.

SAW-MILL (162). On Oct. 5th, near Johnsonville, Ark., the Davis steam mill was destroyed by the explosion of the boiler. A young man named James Davis was instantly killed. The engineer and another man, names not known, were badly, if not fatally, injured.

COTTON-GIN (163). Edward Forrest and William Sims were instantly killed at Griffin, Ga., on Oct. 6th, and Mr. Stillwell and Peter McCann fatally wounded by the explosion of the cotton-gin boiler of Mr. J. M. Stillwell.

LOCOMOTIVE (164). As the Rome, Watertown, & Ogdensburg train from the east, due at Oswego, N. Y., at 9.35 P. M., was standing at the station at Mexico on Oct. 8th, the crown sheet of the locomotive blew out. Fireman Harry Hudson, who was in the cab, was horribly burned and scalded, and will die. Martin Wells of Randallsville and Andrew Hunt of Redwood, brakemen, were also terribly scalded, but whether their injuries are fatal is not known. The injured men were brought to the hospital in this city. Engineer John Chase was in the station at the time and escaped injury.

SAW-MILL (165). A terrible explosion occurred at the Ducey Lumber Company's lower saw-mill at Muskegon, Mich., on Oct. 8th. As the fireman, William Yerger, was getting up steam to start the engines, four of the six boilers exploded with tremendous force, wrecking one-third of the building completely, and throwing the other two boilers from their foundations. Nine men were injured. Yerger, the fireman, was caught under the timbers and escaping steam scalded him terribly. He will die. A young man named Hawkins is also fatally injured. The loss is estimated at $12,000.

ROLLING-MILL (166). On Oct. 11th, a boiler in the Hayden rolling-mill at Columbus, O., exploded, totally demolishing the boiler-house and severely injuring a number of employes, two of them fatally.

LOCOMOTIVE (167). A Chicago & Erie locomotive, which left the roundhouse at

Huntington, Ind., going west, about nine o'clock on the night of Oct. 11th, exploded before it was two miles out of the city. Engineer Edward Murphy was killed and his fireman fatally injured. The engine was running light.

SAW-MILL (168). One of the boilers at the Penoyar mill, Oscoda, blew up October 14th. No one was injured.

LOCOMOTIVE (169). The boiler of a shifting engine at the Eliza furnace of Jones & Laughlin, Pittsburg, Pa., exploded Oct. 20th, killing Engineer John Flatly and fireman Thomas McGuff. Pieces of the flying boiler struck and injured Joseph Ferrin and John Clark, employes at the furnace.

THRESHING MACHINE (170). On Oct. 21st, a threshing engine boiler exploded at Litchfield, Minn., with terrible results. Dennis Kelly was instantly killed and twelve others badly injured.

FLAT HOUSE (171). A boiler in the engine room of the San Carlo flat house, owned by Daniel Loring, at Broadway and Thirty-first Street, New York, on Oct. 27th, causing some excitement on Broadway, and necessitating the calling out of the fire department. The house was filled with steam, but no material damage was done.

TOW BOAT (172). The boilers of W. H. Brown's new tow-boat *Alex. Swift*, exploded on Oct. 28th in the Monongahela River, opposite Glenwood. The boat was completely wrecked, but none of the crew were badly hurt. The men on board at the time were blown into the river. The *Alex. Swift* was one of the largest tow-boats on the river, and was returning from her first trip when the accident took place. She was valued at $30,000, and is a complete loss.

FLOURING MILLS (173). Bozeman's big flouring mills at Marion, Kan., were wrecked on Oct. 29th, by the bursting of the boiler. Cy Allen, the engineer, was killed, and R. Bozeman, one of the proprietors, was terribly burned.

ROLLING MILLS (174). A serious explosion occurred on Oct. 30th, at the rolling mills of the Portage Iron Company, located at Duncansville, seven miles south of Altoona, Pa. Shortly after 8 o'clock one of the three large boilers in the ten-inch mill exploded from an unknown cause, and the report could be plainly heard for miles around. Those fatally injured are: James Weaver, aged 28, badly scalded; Samuel Flick, fireman, aged 48, scalded about face and body; William Miller, aged 30 years, badly scalded; Theodore Orth, puddler, scalded and mangled. Several others, whose names are unknown, were slightly scalded.

BARN (175). Charles Jacobson's barn in Willimantic, Conn., was destroyed by fire on Oct. 30th. The immediate cause of the fire was the explosion of a boiler that he used for cooking feed for his cattle. One end of the barn was blown out, and the flames spread so rapidly that nothing could be done to save the barn or the stock. Jacobson was badly burned on the head, face, and neck.

AN Italian torpedo boat which left Naples for Spezzia, some time ago, burst her boilers and foundered at sea. Three officers and fifteen sailors were drowned.

A SIBERIAN exile, Constantine Ponottazonko by name, having a strong desire to see his wife and children in St. Petersburg, absented himself from his place of exile and made his way on foot from Tobolsk to the capital of the empire, a distance of more than 2,000 miles. He found his family well, and lived with them a few weeks. His desire thus satisfied, he presented himself to the authorities of his own accord, and confessed to be an exile from the district which the government had assigned for his dwelling. In view of the palliating circumstances, the judge reduced his punishment to only seven days' confinement in prison, after the expiration of which he will be delivered to the government authorities to be sent back to the place of his exile. "In this wise," says a St. Petersburg paper, exultingly, "mercy and justice meet in holy Russia."—*New York Sun.*

Concerning Spiders.

In a corner of the ceiling a spider has made its web, or, better, its net. The housekeeper quickly takes her pope's head and cruelly removes the little masterpiece. This term "masterpiece" will cause a smile of compassion to appear on the face of the reader who has never known any spider webs but those made dirty by dust, and who has never seen the animal at work, nor has observed the net-work issuing from its legs—we came near saying from its hands. The little animal that we wrongly decry and cause children to fear, had constructed this light, flexible, elastic web (which obtains its elements of resistance from its suppleness, form, and arrangement) of a long silky thread. The wind may agitate it as it does the sails of a ship. Like the flexible reed, it bends, but does not break. From being in the first place clean, glossy, and white, it becomes blackish and repugnant through getting covered with the dust held in suspension in the atmosphere, and which the ascending currents of air carry up to the ceiling.

How is so small a being able to draw from its body so remarkable a length of thread, in an almost continuous manner? If it merely unwound a bobbin, where would it find a place for the bobbin in its body?

But the thread is formed only on its exit from the body, just as our beard and hair are. In the interior it is a thick, viscid, glutinous liquid, a soft paste secreted by organs called glands. It is likewise glands that produce hair, tears, nails, nasal mucus, ear wax, and other such products.

As soon as the spider's paste reaches the air, it dries and becomes solid. Before its exit from the animal's body, the soft matter has no form. The spider expels it through two or three pairs of spinnerets that are situated at the lower part of the abdomen. The extremity of the spinnerets contains numerous small apertures, and to each of these corresponds a very small open tube. It is through these tubes that the pasty matter makes its exit. The various jets, still soft, unite and form a single filament—the spider's thread. This thread is therefore made up of a large number of smaller threads, and we may judge of the slenderness of the latter when we consider that the compound thread itself is the emblem of tenuity.

The role of the spider is not limited to the production of the raw material; like a skillful spinner, it finishes and polishes the crude thread and renders it regular, and then directs the filament thus prepared so as to form the net or web, or whatever you wish to call it. It draws everything from its own resources; for it neither flax nor hemp is sown; it is both a spinning and weaving machine; it carries with it the raw material, the mechanism, and the machinist. The extremities of its feet are true combs, some having fine and close teeth, and others strong and distant ones. It is interesting to watch the spider at work, turning aside the thread with one leg or guiding it through the teeth, just as a woman, comb in hand, makes furrows in her hair when she is dressing it.

The manner in which the web is constructed has often been described with more complacency and talent than accuracy. We shall try to describe this remarkable work with precision. The *Epeira diadema* (the common garden spider), having selected a point of a branch or some other object, allows the liquid to exude from its spinnerets in varying quantity. The thread is very light and the least breath of air, which would not cause a ripple upon the surface of water, is sufficient to carry it forward in the direction that it is blowing. It thus reaches a new branch at a certain distance from the first. The spider fixes it to this, and afterward draws it in until it is sufficiently taut. This done, it repeats the operation, starting from the second fixed point, and selecting a new point situated lower than the first. It afterward returns to the first thread, which it traverses in part, and stops at a certain point, whence it carries a line to the second. It thus constructs a sensibly vertical triangle, whose angles it next truncates by other threads. The external framework, or scaffolding, thus formed, is composed of a stronger web than the radii and cross threads subsequently introduced.

It next returns to the first thread, and after reaching a certain point it lets down a thread passing through the middle of the web, and extending to the other side of it. As the spider walks, the thread follows it like a slack cord, and it is not until the second extremity has been fixed that the spider gives it the proper tension, after the manner of a violinist tightening the strings of his instrument. Starting from the center of the last thread, it now proceeds to direct radii to the various parts of the frame, and, as a general thing, regularly and systematically. In order to construct each radius it walks along the preceding one, and, at the same time, produces its thread. This new thread is pushed aside by one of the spider's hind legs in order that the two threads may not become agglutinated. The animal thus reaches the frame, along which it moves for an instant, all the while secreting thread. It afterward fixes the extremity and tautens the thread so that the new radius becomes the third side of a triangle of which the spider has traversed the two other sides. All the radii are constructed in the same way; they are regularly spaced, and the angle formed by any two consecutive ones is sensibly the same.

Starting from the center, the spider then constructs a spiral which extends as far outward as the frame; and, curiously enough, this is made with a dry and not a glutinous thread. Starting from a certain distance from the center the spider next lays down transverse threads which run from one radius to another, and which, as a whole, form nearly regular polygons. These threads are glutinous, and in measure as they are formed the spider destroys the corresponding portion of the spiral, of which it allows only the first few convolutions near the center to remain. It would seem that the spiral serves only as a scaffolding. Some species leave a free space between two radii, and others construct a fixed sinuous ribbon, in which they deposit their eggs.

A close examination of the threads shows that those of the spiral differ from those of the polygons. They have neither the same color nor the same form. Those of the polygon are formed of long rows of globules comparable to pearls spaced along a string. With sedentary species the network is at once a trap and a dwelling-place. The animal does not go hunting—it does not run after fortune, but awaits it in its nest, and this exposes it to the danger of a fast. But flies are numerous in our houses and out of doors. Woe to the insect that happens heedlessly to strike the fragile edifice. The spider feels a vibration under its legs, gives a single bound from its dwelling, falls upon the imprudent insect, pierces it with its fangs, and at the same time injects into the wound an almost imperceptible drop of venom. It then drinks in the juices of its victim from the soft parts of the body, and leaves the remainder of its repast upon the web. If the fly struggles, the spider surrounds it with a few convolutions of thread in order to impede its movements; but if the animal is strong enough to endanger the solidity of the web by the shaking that it gives it, the spider will be the first to get rid of it by breaking a few meshes.—*Scientific American Supplement, from La Nature.*

The Human Eye.

"The eye," says Foster, "is a camera, consisting of a series of lenses and media arranged in a dark chamber, the iris serving as a diaphragm; and the purpose of the apparatus is to form on the retina a distinct image of external objects." The retina corresponds to the sensitive plate, and the eyelids may be likened to the lens cap. The image on the retina may be distinctly seen by removing the white exterior or "sclerotic coat" from the back of an ox's eye, and examining the retina while the eye is directed toward some well-lighted object.

Corresponding to the lens of the camera, we have several transparent refracting media in the eye. First of all there is the cornea, which is outermost. This is hard, in order that it may not be easily injured, and so perfectly transparent that it cannot be seen unless the eye is looked at sidewise, so as to view it in profile. It is continuous

with, and forms a part of, the hard white coating that surrounds the whole eye. If it be punctured, so as to let the aqueous humor that is behind it escape, the cornea loses its transparency and its convexity, and becomes opaque and flaccid. Just back of the cornea is the watery fluid known as the "aqueous humor," and referred to in the preceding sentence. Then comes the iris, which is the colored ring surrounding the pupil of the eye — in fact, the pupil is merely a round hole in the center of the iris. Behind the iris is the lens, a very beautiful transparent object, more convex on the back side than on the front. Then comes the main body of the eye, which is filled with a marvelously transparent jelly called the "vitreous" (or glass-like) humor. Behind all of these is the sensitive curtain of nerve-fibres, blood vessels, and other minute structures, known as the "retina."

In an average eye, when the person to whom it belongs is looking at a distant object, the principal dimensions of the optical apparatus are as follows:

Radius of curvature of cornea,	.32	inch.
" " " of front surface of lens,	.40	"
" " " of rear surface of lens,	.24	"
Distance from front surface of cornea to front surface of lens,	.16	"
Thickness of lens at center,	.16	"
Distance from front surface of cornea to retina,	.906	"
Average refractive index of lens,	1.4545	"
Refractive index of cornea, and of vitreous and aqueous humors,	1.3377	"

It is, of course, necessary to focus the eye, as well as all other optical instruments; for if the images were not formed directly on the retina, the objects would appear blurred, like a photograph taken when the sensitive plate is out of focus. In the camera the necessary adjustment is obtained by altering the distance between the lens and the ground glass screen; but it could not be done very well in this manner in the eye, because any change in the general form of the organ would increase the pressure on the watery substances inside, and these would react on the delicate vessels in the retina, forcing the blood out of them, and bringing the eye into an abnormal condition. It is, therefore, accomplished by altering the shape of the lens, which becomes more convex when we direct our gaze from distant objects to near ones.

When the adjusting mechanism of the eye cannot bring the light rays to a focus exactly upon the retina, a person is said to be near-sighted, or far-sighted, as the case may be. He may also be astigmatic, by which we mean that the cornea of his eye may not be spherical in shape, a horizontal section of it having a different curvature from a vertical section; or he may be astigmatic and near-sighted or far-sighted at the same time. Most eyes are astigmatic to some extent. All of these defects can be corrected by wearing suitable glasses, the purpose of which is to assist the eye in focusing objects on the retina. The far-sightedness that comes on with age is due to loss of power in the muscles that control the convexity of the lens.

Interesting as the other portions of the eye are, it is the wonderful retina that most attracts our attention. The construction of the retina is most intricate. According to Max Schultze, it consists of no less than nine distinct layers, the functions of which are not yet perfectly understood. It has been ascertained by H. Müller and others, that the true seat of the sense of sight — that is, the part corresponding to the sensitive plate in the camera — is in the last or external layer of the retina. This is known as the bacillary layer, and is thus described by William Turner, F. R. S.: "The bacillary layer, or membrane of Jacob, consists of multitudes of elongated bodies, arranged side by side like rows of palisades, and perpendicularly to the surfaces of the retina. Some of these bod-

ies are cylindrical, and are named the *rods* of the retina; others flask-shaped, and named the *cones* of the retina; the rods equal in length the entire thickness of the bacillary layer; the cones are shorter than the rods, and are interspersed at regular intervals between them." We must consider that the cones and rods are separately capable of performing the functions of the retina, for this layer is composed entirely of rods in bats, hedge-hogs, moles, and cartilaginous fishes; while in reptiles it is composed exclusively of cones.

In the most sensitive portion of the human retina, the rods are entirely absent, and the cones are arranged closely together, the diameter of the widest part of each cone being .00012 of an inch, and the distance from center to center being .00016 of an inch. Now, with most people, two stars appear single to the unaided eye, when the angle between them is less than 60″. The distance of the center of the lens of the eye from the retina being about .67 of an inch, a simple calculation shows us that the images of two such stars on the retina will be .00019 of an inch apart. The close correspondence between this and the distance from center to center of the cones (.00016 inches) suggests an interesting hypothesis, which is, that when we look at a picture or a landscape, we do not really have a continuous view of it, but that we perceive as many different points in it as there are cones in the eye, the brain subsequently fusing these multitudinous impressions into one harmonious whole. This attractive bit of speculation naturally leads us to the consideration of other problems of like nature. For instance, does an insect, like a fly, with a compound eye capable of looking in almost every direction at once, have similar single views of the world, or does he have as many different impressions of it as he has eyes, and base his actions on what the majority of his eyes tell him?

If an eye be kept in the dark for some time, and then brought into the light and examined quickly, the retina will be found to be of a beautiful purple-red color. This soon fades away, leaving the retina colorless. Microscopic examination shows that this color is confined wholly to the outer ends of the rods, and the pigment that causes it is called the "visual purple." Upon removing the eye into the dark once more, the purple color is again restored to it. If the purple retina be removed from the eye, and so placed that the image of some strongly illuminated object falls upon it, a photograph of the object may be taken, the retina being the sensitive plate. The picture so obtained is a positive, as photographers say, and may be fixed and rendered permanent by quickly immersing it in a four per cent. solution of alum.

We are unable, in this short article, to discuss the subject of color, though much has been learned about the nature of color sensations by the researches of Helmholtz, Maxwell, Abney, Peirce, and others. The action of the eye, in perceiving colors, is not yet thoroughly understood; but those interested will find an excellent review of existing theories in Foster's *Physiology*, page 524 (Fourth Edition, 1884).

We read, in an exchange, of a novel flywheel. The hub is of cast iron, and in the place of spokes two disks built of steel plates are bolted to the hub. The wheel so made is about twenty feet in diameter, and around the rim seventy tons of steel wire are wound, each strand being under a tension of fifty pounds. The strength of such a structure is immensely greater than that of an ordinary cast-iron wheel; in fact, it is difficult to imagine such a wheel bursting. The outer fibres of the wire rim would probably part first, and thus give warning of the coming danger. At all events, this particular wheel, twenty feet in diameter and weighing seventy tons, is run at a speed of 240 revolutions a minute, so that the rim travels a mile every twenty-one seconds.

The Locomotive.

HARTFORD, DECEMBER 15, 1890.

J. M. ALLEN, *Editor.* A. D. RISTEEN, *Associate Editor.*

THE LOCOMOTIVE *can be obtained free by calling at any of the company's agencies.*
Subscription price 50 *cents per year when mailed from this office.*
Bound volumes one dollar each.

Papers that borrow cuts from us will do us a favor if they will plainly mark them in returning so that we may give proper credit on our books.

THE present issue brings another editorial year to a close. The title page and index to the LOCOMOTIVE for 1890 may be had by any one who wishes to preserve his files, by applying by letter to the Home Office of this company, at Hartford, Conn. Bound volumes may also be had, shortly, at the usual price of one dollar each.

THE interest in Dr. Robert Koch's discovery is still intense. What the composition of the lymph is, we can as yet only conjecture; various accounts of its preparation have appeared, but we see no reason for believing that any of them are correct. The doctor is continuing his experiments, and the indications are that he has a good thing. Much more has been claimed for it, by persons ignorant of the nature of tuberculosis, than the facts warrant. The doctor has explained that the lymph can be of little benefit in advanced cases, for, when the lungs have been destroyed, no treatment can replace them. It is in the earlier stages of the disease that his remedy is valuable.

WE often find steam gauges so arranged that their indications are necessarily a number of pounds in error, owing to the static pressure of water of condensation in the connections. While the error does not ordinarily exceed two or three pounds, it sometimes is far greater than this, and becomes of grave importance, especially in low pressure systems. We met with a case recently in which an ordinary heating boiler was in the basement, and the gauge was in the owner's room on the third floor, fully twenty-five feet above. The piping was so arranged that it was an easy matter for it to fill up with water condensed from the steam, so that the indication of the gauge might be as much as ten pounds less than the actual pressure in the boiler. Such a gauge, it need hardly be said, is no better than none at all. In fact, it becomes a positive source of danger.

CONSIDERABLE criticism of the directors of the Lick Observatory has been made by the papers, the claim being made that the telescope is not used for the purpose for which the donor intended it.

The original purpose of the gift was undoubtedly to promote the interests of popular astronomy, and the people at large were supposed to have the benefit of the observations made with it. The directors, in answer to these criticisms, state that, although Mr. Lick gave them a fine instrumental outfit, he left them an endowment that is entirely inadequate to carry on researches.

It seems to the uninitiated, however, that if the directors were a little more energetic in the search, they could find such amounts as may be necessary to fulfill the wishes of

Mr. Lick. In fact, there are a good many of us who would make large personal sacrifices if we could only have the privilege of using such a glass.

Rolling Tubes from Solid Bars.

We have received several letters asking for information concerning the Mannesmann process of rolling tubes from solid bars. Our correspondents will find some interesting information on this subject in the *Transactions of the American Society of Mechanical Engineers*, Vol. VIII, 1887. Articles on the same subject have also appeared in various periodicals. See, for instance, the *Scientific American Supplement* for November 15, 1890, page 12, 393; also *Journal of the Franklin Institute* for December, 1890.

A number of specimens were exhibited before the Society of Mechanical Engineers, some of which had been expanded, flanged, flattened, etc., with eminently satisfactory results. Specimens of brass and copper tubes, made by the same process, were also exhibited.

In explanation of the process we may quote Mr. George H. Babcock's remarks. The process, he says, "is the invention of two brothers named Mannesmann, of Remscheid, Germany, and the *modus operandi* is as difficult to understand and explain as was Giffard's injector or Bohnenberger's gyroscope. The apparatus necessary to effect the result consists of two rollers slightly conical, the axes of which are in different planes — or form two lines in a twisted surface — their nearest approach being at or near the bases of the cones. The surface of the cones may be threaded in such a way that they tend to draw a body rolling between them towards their larger ends. The bar to be operated upon should be approximately round, and its end is to be inserted, while hot, between the cones, its axis being intermediate at all points to the axes of the rollers. The action of the cones is to draw out and twist the bar, during which operation a hollow forms in its axis, and when the bar emerges it is a tube with a somewhat rough but approximately cylindrical and concentric bore, the surface of which shows a decided twist. Among the exhibits [referred to above] is a bar which was drawn down at each end before going through the mill, so that no action took place at these ends. This bar was broken after it had cooled, and it shows conclusively, by the color and character of the bore, that no tool and not even the air touched it during the operation, the interior having the same appearance as the fracture.

"The tubes thus formed are applicable directly for some purposes, but by a proper formation of the rolls behind the bases of the cones, or by additional rolls, with a suitable mandrel or mandrels, this tube may, at the same heat, be expanded and finished into a regular weldless boiler tube, or gas pipe, as some of the specimens show; or the finishing may be done as a separate operation."

It is interesting to note that the tendency to form a hole in the center of a bar, when conical rolls are used, had been noticed often, before the Mannesmann process came into use. The rolls made the holes where they were not wanted, however, and nobody seems to have thought of utilizing this troublesome action as the Mannesmann brothers have utilized it.

Professor Wedding, in a recent lecture on the subject in Pittsburg, said: "Some thirty-miles of three inch tubes made by this process, and an equal length of four-inch tubes, have been furnished for a South American water main. A petroleum residue conduit in the Caucasian district has been furnished with fifteen miles of four-inch tubes, the oil being pumped to a height of 3,300 feet to the top of a mountain. Every piece of this pipe was tested by the buyers to a pressure of 2,500 pounds to the square inch. Mannesmann tubes that have been turned inside out and then doubled up, give evidence

that the metal not only did not suffer through having been worked by this process, but that, on the contrary, the quality of the steel was improved in a most remarkable manner. Welded tubes, if treated in this manner, would split open; while tubes bored and turned from solid blocks could not be so treated with safety, on account of the absence of the spiral-like fibrous structure for which the Mannesmann tubes are noted. The diameter of some of the sample pieces has been increased threefold by forcing a conical wedge into their ends, without using any other pressure."

On Errors in Boiler Trials.

Many engineers and experts, in making boiler trials, measure the weight of fuel, the weight of water, and the other quantities, without paying the slightest attention to the *relative* accuracy with which these quantities should be determined. The object of this article is to show that such considerations may be of importance when a very accurate result is required.

As an illustration of the point we wish to make, let us take the following example: At a certain boiler trial the amount of coal actually burned was 2,354 pounds, and the amount of water evaporated was 20,640 pounds. These figures give us an evaporative efficiency of 8.77 pounds of water per pound of coal.

Now let us assume that an error of fifty pounds was made in weighing the water, so that the apparent amount of water evaporated was 20,690 pounds, instead of 20,640 pounds, the actual amount. $20{,}690 \div 2{,}354 = 8.79$, so that the apparent evaporative performance of the boiler is 8.79 pounds of water per pound of coal, instead of 8.77 pounds, which is the correct result. The difference introduced by an error of fifty pounds in weighing the water, it will be seen, is only .02.

Now let us make a different supposition. Let us assume that the water was weighed correctly, but that an error of fifty pounds was made in weighing the coal, the apparent weight of coal being 2,304 pounds. Then $20{,}640 \div 2{,}304 = 8.96$, so that the apparent evaporative performance of the boiler is 8.96 pounds of water per pound of coal, instead of the true result, 8.77 pounds. The difference in this case is quite appreciable, and the example shows that it makes quite a difference whether a given error is made in weighing the coal or in weighing the water.

The moral of this is, we suppose, that we should pay particular attention to the weighing of the coal. The scales should be very accurately balanced for the weight of the barrow, and the readings should be taken closely. The value of the kindlings, expressed in pounds of coal, should also be carefully ascertained. Furthermore, if we wish an accurate estimate of the evaporation per pound of *combustible*, we should be very careful about wetting down the fire after it is hauled; for the error introduced by the weight of the moisture in the ash produces as great an effect on the result as an equal error in weighing the coal.

The ideal way of carrying out a test is to make all the measurements in such a manner that the error committed in making any one of them shall have the same effect on the result as the error committed in making any other one. The principle is the same, to use an excellent but threadbare illustration, as in making a chain. Don't make one link any stronger than any other one, for if you do you are wasting labor. This can be achieved in evaporative tests by weighing the coal with 8 or 9 times the accuracy used in weighing the water, the ordinary evaporation per pound of coal being from 8 to 9 pounds. Of course we do not mean that this should be done with any very great degree of precision, but what we do mean is that the water should be weighed with ordinary care, and the coal with much greater care.

Another very necessary operation in testing evaporative efficiencies, is the determination of the dryness of the steam generated. The ordinary method of conducting this part of the work is described in the LOCOMOTIVE for March, 1890, on page 35, and to this description we would refer the reader. In the place of the steelyards there shown, a spring balance of some sort is often used. This should never be done unless the spring balance is of special construction, so as to weigh very accurately. The ordinary spring balance will not weigh closer than an ounce — or, at the outside, half an ounce. The total weight of steam admitted being 16 ounces, half an ounce is one thirty-second of the whole amount, and an error of one thirty-second in the amount of steam admitted will produce approximately the same effect as an equal error in noting the rise in temperature of the water in the pail. For instance, let us suppose that a given sample of steam actually contains 3 per cent. of moisture, but that we *have* admitted 16½ ounces of steam, when we think we have admitted only 16 ounces. The error, half an ounce, is one thirty-second of the whole amount. The rise in temperature would have been 102° Fah.* if we had really introduced only 16 pounds; but the real rise in temperature will be one thirty-second greater than this, since we have introduced one thirty-second more steam than we think we have. A thirty-second of 102° is 3°, which added to 102° gives 105°; and this is the *actual* rise in the temperature of the water in the pail. Thus we see that although the steam really contained 3 per cent. of moisture, the error of half an ounce in the weight of the pail would make us conclude that it was absolutely dry. The moral of this is, that there is no use in measuring the rise in the temperature of the water to within one per cent., if we are going to commit an error of at least three per cent., and perhaps six per cent., in weighing the water.

We may call attention here to another error that one is liable to, in determining the dryness of steam by the ordinary method — an error that at first sight seems quite insignificant. When the steam is still entering the pail, and the steelyards are approaching equilibrium, the easiest way to secure an accurate balance is to leave the pail in position, with the steam pipe still dipping below the surface of the water, and close the valve just at the right instant. The final weighing is thus performed with the steam-pipe submerged; while ordinarily the ten pounds of water originally put in are weighed without the steam-pipe. For the sake of investigating the effect of this difference let us assume that the pipe dips 5 inches below the surface of the water, and that the area of its cross section is half a square inch. When in position, therefore, it displaces 2½ cubic inches of water, and therefore increases the weight of the pail and contents by nearly an ounce and a half. It will be seen from this, and from the previous calculation of the effect of an error of half an ounce, that it is a highly important matter to have the steam-pipe dipping into the pail when the original ten pounds of water are weighed out. The most satisfactory way is to make a suitable mark on the pipe, and bring this mark to the level of the water in the pipe whenever a weighing is made.

A Microscopic Cow-Boy.

I sat one day observing a common *monas* — a kind of minute infusorial creature — under moderate microscopic power. I watched the highly successful and expeditious process by means of which this voracious little creature drew in numbers of still smaller beings, with long strokes of its flexible "flail," to be as rapidly transferred, one by one, to the proportionately capacious stomach within its rotund body.

All at once a new-comer appeared within the field of vision, in the shape of an *acineta* — another microscopic creature, and a very large one of its kind — which had

* See table on page 36 in March LOCOMOTIVE.

somehow got off its pedicel and was drifting with the stream. Perhaps it was merely moving, of its own will, to a better place for hunting; for, as I looked, it wrapped an improvised tentacle around a "stump" on the bottom of the miniature river, and at once brought up erect, all secure and ready for business at its new stand. Very cautiously, yet with what seemed an expectant air, it then thrust out a long, thread-like tube, which was provided with a trumpet-shaped sucker at the end, and proceeded to explore the neighborhood for game, prodding to right and left.

The industrious *monas* took no heed of the new-comer until, suddenly, the long tube of the *acineta* came into contact with its well-filled stomach. Then, indeed, it started as sharply as a schoolboy who has received a hard thrust from one of its mates, and made every effort to get away, but quite in vain. No sooner did the *acineta's* sucker-tube touch the *monas* than the *acineta* itself could be seen settling down to its work and bracing its feet, so to speak, to hold on firmly.

Then a hard struggle followed, which lasted for some moments, both combatants doing their best, the one to escape, the other to hold fast. The *acineta*, being anchored, had an advantage; and ere long the *monas*, apparently tired out, succumbed to the inevitable.

The inevitable in this case proved to be a suction process, exerted through the long tube; for presently, as I watched, the well-fed *monas* began to shrink, shrivel up, and collapse, while the *acineta* grew correspondingly rotund. All the soft, inner protoplasmic parts of the *monas* were being transferred to the *acineta*, which did not release its suction pump until it had completely drained the body of its victim. Then it withdrew the tube and allowed the empty envelope, or shell, to float away.

"Truly, my small fellow," thought I, "that sucker-tube of yours appears to be a remarkably good implement with which to get a living." I observed this fortunate pigmy's operations for five or ten minutes, during which time it sucked dry quite half a dozen unwary infusoria of various species.

But Nemesis was on its track, as it is almost sure to be with all who live by violence and extortion. A kind of cow-boy-looking protozoön came galloping, or rather swimming, that way. It, too, carried a sucker-tube, but a much shorter one than the *acineta's*. In addition, it had, trailing behind it, an exceedingly long filament, resembling a lariat or lasso. I recognized the last comer as a *hemiophrya*, an aggressive and altogether cruel member of infusorial society.

The *hemiophrya* did not seem to be under the necessity of feeling for its prey, as the *acineta* had done. Apparently it saw its victims while yet at a distance of twenty microscopic paces. Then, in an instant, it whisked out the long lasso and coiled it around the *acineta's* body. The previous scuffles were as nothing to the one which now followed. The "cow-boy" surged and tugged at his lariat filament, striving to pull in his prize, while the *acineta*, holding fast by its tentacle to the "stump" at the bottom, resisted vigorously and made a good fight.

At last the *acineta's* tentacle broke, or else the stump pulled out — I could not discover which. The *hemiophrya* drew the *acineta* in, hastily applied his sucker-tube and began to dine. In the course of ten or twelve seconds the empty "shell" of the *acineta* was floating along in the wake of the defunct *monas;* and the *hemiophrya* was coiling his lariat, as if getting ready for another cast.

At this point I was called out for a time. Whether Nemesis overtook the "cow-boy," in turn, I am unable to say, but I deem it quite probable. When I glanced down the microscope shaft, an hour later, all was changed; another landscape, a different river, and new forms of life had come upon the stage. — *C. A. Stephens, in Youth's Companion.*

American Discoveries.

Our esteemed London contemporary, the *Practical Engineer*, recently had a few words to say about English *versus* American discoveries in pure science, quoting an article from an American trades-paper in connection with its remarks. The general spirit of the article may be inferred from the following few extracts: "There were great men before Agamemnon, and before Edison there were great men. Among these we may mention Davy, Faraday, Oersted. . . . It is true that American practice has a world-wide fame, and that American criteria are the most popular of all, but where in all our country [the United States] are there any workers in pure science? Who is doing any original work? We have our Edisons and other clever heads and cunning hands at work in applied science, but no pure science men; none who, without hope of dollars before them, are content to devote themselves to a search in those realms, vast and unexplored, where Nature keeps her secrets waiting only the bold adventurer, waiting only the unerring mind, the practiced eye, that shall gauge her truly."

In the vernacular tongue, this gives us a pain. It seems as though nobody could write anything about American discoverers now-a-days without bringing in Edison as the king of them all. Now, there is no doubt that Mr. Edison has invented a few useful things, and some other things that ought to have a good sale if put on the market as instructive toys. He has also, we believe, invented one or two patent medicines. But though we have no desire to detract from his glory, we feel that it is only doing justice to others to protest against giving him credit for all things.

Since the foregoing quotation states that there are no workers in pure science here, we must conclude that the author of it does not know what is really going on in this country. Does he know anything of Ira Remsen's work in chemistry? or of Pickering's and Draper's work in celestial photography and spectrum analysis? or of Rowland's work in electricity and other branches of physics? Did he ever hear of Joseph Henry, or of Professor Marsh, or of Gray, or of Woodward, or Dana, or Langley? It is true we have no Faraday, no Maxwell, no Thomson; but we have a host of investigators who are "doing original work" without expecting remuneration, and they should not be discouraged by any such bilious remarks as our contemporary makes.

We quote a little further from the article under consideration: "Why is it that, if two wires be placed parallel or nearly so, one of which is charged with electricity, the uncharged one will induce a current from the other? If only we knew this, the mysteries of induction, the great disturber of electrical service, would be laid bare. . . . And so *ad infinitum*. There are innumerable subjects that await the investigator and invite the analyst. There are no dollars in such investigations, — unless they should prove successful, — perhaps none for the discoverer even then. And so the faculty of whose prowess we continually boast have, apparently, no inclination to set afoot an earnest and painstaking inquiry." The author's ideas on electro-dynamics appear to be a little hazy; and he apparently does not know that very satisfactory progress has been made toward a solution of the problem of induction. That such progress has been made, he will see by reading Faraday's *Experimental Researches*, Maxwell's *Electricity and Magnetism*, Lodge's *Modern Views of Electricity*, and Hertz's papers on electrical oscillations, for instance, his paper entitled *Ueber die Beziehungen zwischen Licht und Elektricität* (*On the Relation between Light and Electricity*). He does not realize, apparently, that a whole lifetime is often required to "arrive at and establish one little fact in science," so that we cannot all discover big facts. On the whole, we doubt if the author of the article is sufficiently posted on what is taking place in the scientific world to qualify him to make any very exhaustive comparison between English and American discoverers.

Incorporated 1866.

Charter Perpetual.

Issues Policies of Insurance after a Careful Inspection of the Boilers,

COVERING ALL LOSS OR DAMAGE TO

BOILERS, BUILDINGS, AND MACHINERY.

ALSO COVERING

LOSS OF LIFE AND ACCIDENT TO PERSONS

ARISING FROM

Steam Boiler Explosions.

Full information concerning the plan of the Company's operations can be obtained at the

COMPANY'S OFFICE, HARTFORD, CONN.,

Or at any Agency.

J. M. ALLEN, President. W. B. FRANKLIN, Vice-Prest.
J. B. PIERCE, Secretary. FRANCIS B. ALLEN, 2d Vice-Prest.
E. J. MURPHY, M. E., Consulting Engineer.

Board of Directors.

J. M. ALLEN, President.
FRANK W. CHENEY, Treas. Cheney Brothers Silk Manufacturing Co.
CHARLES M. BEACH, of Beach & Co.
DANIEL PHILLIPS, of Adams Express Co.
RICHARD W. H. JARVIS, Prest. Colt's Fire Arms Manufacturing Co.
THOMAS O. ENDERS, President of the U. S. Bank.
LEVERETT BRAINARD, of The Case, Lockwood & Brainard Co.
GEN. WM. B. FRANKLIN, U. S. Commissioner to the Paris Exposition.
NELSON HOLLISTER, of State Bank, Hartford.
HON. HENRY C. ROBINSON, Attorney-at-Law, Hartford, Conn.
HON. FRANCIS B. COOLEY, of the National Exchange Bank, Hartford, Conn.
A. W. JILLSON, late Vice-Prest. Phœnix Fire Ins. Co., Hartford, Conn.
EDMUND A. STEDMAN, Treasurer of the Fidelity Co., of Hartford, Conn.
CLAPP SPOONER, Bridgeport, Conn.
GEORGE BURNHAM, Baldwin Locomotive Works, Philadelphia.
HON. NATHANIEL SHIPMAN, Judge United States Circuit Court.

A. S. Ferry, General Agent, Office at Hartford, Conn.

GENERAL AGENTS.	CHIEF INSPECTORS.	OFFICES.	
THEO. H. BABCOCK,	R. K. McMURRAY,	NEW YORK CITY.	Office, 285 Broadway.
CORBIN & GOODRICH,	WM. G. PIKE.	PHILADELPHIA, PA.	" 430 Walnut St.
LAWFORD & McKIM,		BALTIMORE, MD.	" 22 So. Holliday St.
C. E. ROBERTS,		BOSTON, MASS.	" 35 Pemberton Sq.
		PROVIDENCE, R. I.	" 29 Weybosset St.
H. D. P. BIGELOW,	H. D. P. BIGELOW,	CHICAGO, ILL.	" 112 Quincy St.
C. C. GARDINER,		ST. LOUIS, MO.	" 404 Market St.
L. B. PERKINS,	F. S. ALLEN,	HARTFORD, CONN.	" 218 Main Street.
W. G. LINEBURGH & SON,	J. H. RANDALL,	BRIDGEPORT, CONN.	" 11 Franklin Block.
GEO. P. BURWELL,	C. A. BURWELL,	CLEVELAND, OHIO.	" 208 Superior St.
MANN & WILSON,	J. B. WARNER,	SAN FRANCISCO, CAL.	" 306 Sansome St.
ZOLLARS & McGREW,	T. E. SHEARS,	DENVER, COL.	" Granite Bl'g, R'ms 3, 4.
LEITH & MANLY,	B. F. JOHNSON,	BIRMINGHAM, ALA.	" 2015 First Ave.
W. S. HASTIE & SON,		CHARLESTON, S. C.	" 44 Broad St.

INDEX TO VOL. XI, NEW SERIES.

ARTICLES MARKED WITH A STAR (*) ARE ILLUSTRATED.

Accident to the *City of Paris*, 57, 78.
Accidental inventions relating to the steam-engine, 86.
Accidents, miscellaneous, 69.
Alarms, low and high water, 10.
Alcibiades Simonides, the literary forger, 166, 170.
American discoveries, 191.
American lakes, history of the great, 28.
American Society of Mechanical Engineers, 87, 166.
Analysis of water for boilers, 57, 74.
Animals, the musical understanding of, 75.
Ape, an intelligent, 143.
Areas of segments, on the, *11.
Auditorium building in Chicago, the, 77.
Babies, mortality among, 57.
Bears, etc., killed in nature by carbonic acid gas, 7.
Beltrami and the Mississippi river, 41.
Bleeding at the nose, how to stop it, 89.
Boiler explosion in Alliance, Ohio, 26.
a marvelous, 27.
at Pumpherston, Eng., 70. [180.
Boiler explosions, 4, 22, 37, 52, 66, 83, 99, 134, 148, 162,
as reported in newspapers, 26, 77.
summary of, for 1889, 24.
Boiler fronts, *129, *177.
inspection in Germany, 90.
trials, *33, 44.
on errors in, 188.
Boilers, dangerous, use of, 108.
on a new method of exploding, 92.
rotary, connections for, *126.
Book notices. *See publications, notices of.*
Bracing of domes, on the, *81, *97.
Breechings, *129, *177.
Bridges, early railroad, 85.
Bulged plates, on, *65.
Bumped up heads, on, *17.
Butter from cocoanut oil, 26.
Calendar, concerning the, 159.
Calorimetry, *35, 188.
Carburization of iron by the diamond, 106.
Case, Mr. Newton, death of, 167.
Casualties, miscellaneous, 69.
Cats, a brief essay on, 104.
Chicago's Auditorium, 77.
Chimney of the Clark Thread Works, 71.
Chimpanzee, an intelligent, 143.
Chronometer, the first, 62.
City of Paris, accident on the, 57, 78.
Clark Thread Works, chimney of the, 71. [151.
Coast, the Pacific, 1847-1890, by Samuel Nott, C. E.,
Cocoanut oil, as a source of butter, 26.
Colors of plants, preserving the, 69.
photography in, 29.
Conception of light, the modern, 172.
Connecting steam pipes to boilers, *113.
Connections for rotary boilers, *126.
Conscience, lack of, as a means of success, 136.
Consumption. *See Koch, Dr. Robert.*
Contamination of drinking water, detecting, 76.
Corrosion of gauge glasses, *49.
Cowboy, a microscopic, 189.
Cragg, Mr. Joseph, death of, 105.
Dangerous boilers, use of, 108.
Death gulch, 7.
Diamond, carburization of iron by the, 106.
Diamonds and other precious stones, 155.
Diet and dyspepsia, 138.
Digestion, the process of, 156.
Discoveries, American, 191.
Domes, on the design and bracing of, *81, *97.
Drinking water, detecting contamination of, 76.
Drums, attachment of nozzles to, *121.
Dyspepsia and diet, 138.
Earth, determination of shape by the pendulum, 13.
theories of the, 30.
Eccentric steam fittings, *125.
Electrical terms, in common use, 8.
Electricity, execution by, 9.
Eloquent words, on, 54.
Engines, triple expansion, (Note.) 155.
Equivalent evaporation, 58.
Errors in boiler trials, 188.
Evaporation, equivalent, 58.
Execution by electricity and otherwise, 9.
Experimenters in insurance, 164.
Explosions. *See Boiler Explosions.*
Eye, the human, 183.
Feed water analysis, 57, 74.
Filters, inefficacy of, 143.
Fishes, the music of, 55, 60.
Fittings, eccentric steam, *125.
Flue, collapse of a, 57.
Flywheel, a novel, 185.
Forger, a wonderful literary, 166, 170.
Forth bridge, the, 89.
Fronts of boilers, *129, *177.
Gauge glasses, corrosion of, *49.
Gauges, improperly situated, 186.
Germany, boiler inspection in, 90.
Girth seams *vs.* longitudinal seams, 139.
Gravity, determination of by the pendulum, 13.
Great American lakes, history of the, 28.
Grippe, la, 10, 26. [10.
Groetzinger, A. and J., their suit against this company,
Hangers for steam pipes, *116.
Heads of wrought iron, unbraced, *17.
Heating systems, receiving tanks on, *1.
Hirn, G. A., death of, 40.
Hydrostatic tests, 167.
Ice making in the tropics, 109.
Influenza, the, 10, 26.
Inspection of boilers in Germany, 90.
Inspections on Sunday, 105.
Inspectors' reports, 3, 20, 37, 51, 66, 82, 99, 147, 178.
summary of for 1889, 21.
Insurance experimenters, 164.
Inventions relating to the steam engine, accidental, 86.
Iron, carburization of by the diamond, 106.
Joints, on the strength of, 140, 145, 151, 161.
Joints, strains in single riveted, *157.
Kilima-Njaro, ascent of, 27.
Koch, Dr. Robert, 166, 186.
Lakes, history of the great American, 28.
Lawsuit against this company, a, 10.
Lick observatory, criticisms of the, 186.
Light, economical production of, 138.
modern conception of, 172.
Literary forger, a wonderful, 166, 170.
Locomotive Engine running, etc., notice of, 74.
Longitudinal *vs.* girth seams in boilers, 139.
Low-water alarms, 10.
Manchester ship canal, note concerning the, 26.

Manholes, wrench for nuts about, 154.
Mannesmann process for rolling tubes, 187.
Mark Twain, on the medicines of former days, 25.
Measurements, pendulum, 13.
Mechanical Engineers, American Society of, 87, 166.
Medicines of former days, Mark Twain on the, 25.
Meteors, on, 101.
a fall of, out west, 89, 101.
Microscopic cowboy, a, 189.
Miscellaneous accidents, 69.
Mississippi River, early explorations of the, 41.
Modern conception of light, the, 172.
Moisture in steam, *35.
Music of fishes, 55, 60.
Musical understanding of animals, 75.
Nasmyth, Mr. James, 91. [26, 77.
Newspaper reports of boiler explosions, concerning,
Nose bleeding, remedy for, 89.
Notes for THE LOCOMOTIVE, by Samuel Nott, C. E., 85.
Nozzles, attachment of the steam drums, *121.
Obituary notices:
Mr. Newton Case, 167.
Mr. Joseph Cragg, 105.
Old style and new style, 159.
Otis Company's boilers, test of the, 44.
Pacific coast, the, 1847-1890, 151.
Pascagoula, mysterious music of, 55, 60.
Pastor's scanty wardrobe, the, 73.
Pendulum measurements, on, 13.
Photography in natural colors, 29.
Pickering, E. C., his recent spectroscopic discoveries, 93.
Pincushion, a human, 27.
Pipes, connection of to boilers, *113.
main steam, support of, *116.
tobacco, early, 137.
Plants, preserving the colors of, 69.
Plates, bulged, *65.
Pneumonia, concerning, 57.
Precious stones, diamonds and other, 155.
Publications, notices of:
Arc Indicator, a treatise on the, 56.
Circular issued by the Eddy Mfg. Co., 104.
Essay on cats, an, 104.
Bacteria, etc., De Bary on, choice extract from, 40.
Handbook of Engine and Boiler Trials, a, 40.
Experimental Science, 40. [*ford, the*, 88.
Guardians of the Peace and Property of Hart-
German inspection societies, reports of the, 56, [56.
88.
Index to the Journal of the Franklin Institute,
Joseph Baer & Co.'s book catalogue, 88.
Reflections on the Motive Power of heat, 88.
Locomotive Engine Running and Management, 74.
Railroad Engineers' field-book, etc., 56.
Slide Valve Gears, a treatise on, 74.
Technic, the, 10.
Technology Quarterly, the, 74. [155.
Triple Expansion Engines and Engine Trials,
Manchester Steam Users' Association, report of the, 166.
Welsh newspaper, extract from a, 104.
Pumpherston, Eng., disastrous explosion in, 70.
Queen's ferry and the Forth bridge, 89.
Rags that could not be spared, 73.
Receiving tanks on heating systems, *1.
Reports. *See Inspector's Reports.*
Reputation, value of a good, 138.
Reviews. *See Publications, notices of.*
Rotary boilers, connections for, *126.
Salem tunnel, the, 85. [154, *161.
Seams in boilers, on the strength of, 139, *140, *145,
longitudinal *vs.* girth, 139.
Segments, on the areas of, *11.
Sextant, the first, 152.
Shape of the earth determined by the pendulum, 13.
Simonides, Alcibiades, the literary forger, 166, 170.
Smoking, 137.
Spiders, concerning, 182.
Stars, two extraordinary, 93.
Steam, moisture in, *35, 188.
drums, attachment of nozzles to, *121.
engine, accidental inventions relating to the, 86.
fittings, eccentric, *125.
pipes, connection of to boilers, *113.
mains, support of, *116.
Stones, precious, 155.
Strains in single-riveted joints, *157.
Style, old and new (*i. e.* in the calendar), 159.
Success, on lack of conscience as a means of, 136.
Summary of boiler explosions for 1889, 24.
inspectors' reports for 1889, 21.
Sun, estimating apparent size of, 103.
Sunday inspections, concerning, 105.
Support of main steam pipes, *116.
Sweden, the ship, 151, 154.
Tables:
For bumping wrought iron heads, 20.
For computing equivalent evaporation, 58.
For finding percentage of moisture in steam, 36.
Heights of principal buildings in Chicago, 78.
Tanks, receiving, on heating systems, *1.
Technic, the, notice of, 10.
Technology Quarterly, notice of, 74.
Tests, hydrostatic, 167.
Thanksgiving proclamation, first presidential, 6.
Theories of the earth, 30.
Thurston, R. H. *See Publications.*
Trials, boiler, *33, 44, 188.
on errors in, 188. [of, 155.
Triple Expansion Engines and Engine Trials, notice
Tropics, ice-making in the, 109.
Tuberculosis. *See Koch, Dr. Robert.*
Tubes, rolling them from solid bars, 187.
Tunnel, the Salem, 85.
Ware, Mass., tests of boilers in, 44.
Water analysis, 57, 74.
drinking, detecting contamination of, 76.
filters and bacteria, 143.
pressure tests of boilers, 167.
Welsh newspaper, choice selection from a, 104.
Whitworth engineering laboratory, the, 155.
Woodward, Mr. R. S., on theories of the earth, 30.
Words that laugh and cry, 54.
Wrench for nuts about manholes, 154.

CARNEGIE LIBRARY OF PITTSBURGH
3 1812 04248 1151